Cl/SfB
2- Rj7
February 2016

Kingspan TEK® Building System

STANDARD DETAILS FOR 172 MM STRUCTURAL INSULATED PANELS



Fibre-free Core

Kingspan®

Low Energy – Low Carbon Buildings

Contents

Wall Details

W1 Typical wall section.
W2 a Sectional elevation through soleplate fixing detail. Ground bearing slab.
W2 b Typical ground bearing floor slab with ventilated cladding.
W2 c Typical ground bearing floor slab detail with block-work wall.
W3 a Sectional elevation through soleplate fixing detail – Suspended reinforced concrete slab.
W3 b Sectional elevation through wall junction with ground floor slab.
W4 a Sectional elevation through beam and block floor support.
W4 b Sectional elevation through beam and block floor support.
W5 Plan showing typical wall connection detail. Corner & T-junction.
W6 Typical window detail – brickwork external leaf.
W7 Typical section at window sill – brickwork external leaf.
W8 Section at window head (or lintel)
W9 Typical window detail – Ventilated cladding cavity.
W10 Standard external finishes.
W11 Plan view of internal *Kingspan* **TEK**® Building System walls.
W12 Typical separating wall section incorporating room in roof.
W12 a Section through typical separating wall and internal floor assemblies incorporating room in roof.
W12 b Section through typical separating wall assemblies incorporating trussed rafter roof.
W12 c Section through typical separating partial fill timber frame wall with *Kingspan* **TEK**® Building System roof.
W12 d Section through typical separating full fill timber frame wall with *Kingspan* **TEK**® Building System roof.
W13 Plan showing separating wall detail with brickwork external leaf incorporating flanking detail.
W14 Sectional elevation of ventilation inlet / outlet e.g. for MVHR system.
W15 Wall hung boiler installation.
W16 Gas + electricity meter box installation.
W17 External brick tie details for buildings not exceeding 4-storeys high.
W18 a *Kingspan* **TEK**® Building System single separating wall junction with external wall.
W18 b *Kingspan* **TEK**® Building System single separating wall junction – stepped external wall detail.
W18 c Lightweight frame internal wall connection onto *Kingspan* **TEK**® Building System single separating wall.
W18 d *Kingspan* **TEK**® Building System single separating wall junction – ground floor slab detail.
W18 e *Kingspan* **TEK**® Building System single separating wall junction – stepped ground floor slab detail.
W18 f *Kingspan* **TEK**® Building System single separating wall junction – separating floor detail.
W18 g *Kingspan* **TEK**® Building System single separating wall junction – internal floor detail.
W18 h *Kingspan* **TEK**® Building System single separating wall junction – room in roof detail.
W18 j *Kingspan* **TEK**® Building System single separating wall junction – trussed rafter roof detail.
W19 a *Kingspan* **TEK**® Building System external (flanking) wall junction with timber separating walls to Robust Details E-WT-1 and E-WT-2.
W19b *Kingspan* **TEK**® Building System staggered external (flanking) wall junction with timber separating walls to Robust Details E-WT-1 and E-WT-2.

Floor Details

F1 Typical separating wall incorporating room in roof.
F2 Typical separating wall & floor assemblies.
F3 Separating floor detail. Platform frame. Non-Robust detail pre-completion test (pct) required.
F4 Typical connection detail for engineered I-joist floor system.
F5 Alternative I-joist / wall panel connection detail fixed to rim board.
F6 Internal load bearing floor detail.

Roof Details

R1 a Typical eaves detail vertical section with *Kingspan* **TEK**® Building System pitched roof panel.

R1 b Typical eaves detail vertical section with *Kingspan* **TEK**® Building System pitched roof panel (insulation at rafter level only).

R2 Internal roof support details.

R3 Typical roof panel overlaid ridge detail with & without support.

R4 Typical ridge connection details.

R5 Room in roof – dormer perspective & section detail.

R6 Typical roof light detail.

R7 Typical valley detail.

R8 Typical hip detail showing roof panels connected to hip rafter.

R9 Roof to roof – change in level detail.

R10 Typical eaves detail vertical section with truss rafter pitched roof.

R11 *Kingspan* **TEK**® Building System gable junction – truss rafter roof with insulation at ceiling level.

R12 *Kingspan* **TEK**® Building System gable junction – *Kingspan* **TEK**® Building System roof panel.

R13 *Kingspan* **TEK**® Building System external wall junction with warm deck flat roof – timber frame parapet wall.

R14 a Typical eaves detail *Kingspan* **TEK**® Building System external wall junction with pitched roof and internal floor - insulated at line of pitch.

R14 b Typical eaves detail *Kingspan* **TEK**® Building System external wall junction with pitched roof - insulated at line of pitch.

R15 *Kingspan* **TEK**® Building System external wall junction with pitched roof insulated at line of pitch - gable.

Construction Details

C1 Typical panel joints for *Kingspan* **TEK**® Building System wall panels.

C2 Timber post panel joint.

C3 OSB3 cassette panel joint.

C4 Typical wall elevation with window & door openings.

C5 Typical gable elevation with ridge beam pocket detail.

Miscellaneous Details

M1 Standard fixings – sparrennägel, smooth, ringshank nails & SIP screw.

M2 Standard fixings – hangers & brackets.

M3 Wall mounted services detail – electrical.

M4 External fireplace recess & chimney.

M5 Alternate external fireplace recess & chimney.

NB These details offer general guidance and are not exhaustive, they have been compiled based on best practice and current information at the time of going to press. Please confirm these details are the current edition at the point of need by contacting the *Kingspan* **TEK**® Technical Service Department (see rear cover). The use of these details and their application remain the responsibility of the principal designer who should at all times verify their suitability, accuracy and likely performance with respect to their intended usage. Accordingly, Kingspan Insulation Ltd accepts no liability for any errors, omissions or claims arising from their use. For further advice on the application of these details, please contact the *Kingspan* **TEK**® Technical Service Department (see rear cover).

Fixing Specifications

Application	Fastener Type	Spacing
Fixing soleplate or combined soleplate and bottomplate	Specification should be in accordance with project structural engineers' recommendations based upon geography and project foundation substructure	As per project structural engineers' recommendations
Panel straps to substructure / foundations	Specifications should be in accordance with project structural engineers' recommendations based upon geography and project foundation substructure	As per project structural engineers' recommendations
Fixing 50 mm x 110 mm bottomplates to soleplates	3.1 mm x 90 mm galvanized ring-shank nails	200 mm centres in two staggered rows
Fixing 15 mm x 100 mm OSB3 splines into *Kingspan* **TEK**® Building System panels	2.8 mm x 63 mm galvanized ring-shank nails	100 mm centres both sides of the panel
Fixing 50 mm x 110 mm bottomplates, headplates, end timbers, edge timbers into *Kingspan* **TEK**® Building System panels	2.8 mm x 63 mm galvanized ring-shank nails	50 mm centres both sides of the panel
Fixing 100 mm x 110 mm timber posts into *Kingspan* **TEK**® Building System panels	2.8 mm x 63 mm galvanized ring-shank nails	50 mm centres both sides of the panel
Fixing 110 mm x 150 mm bevelled headplate to *Kingspan* **TEK**® Building System panels	2.8 mm x 63 mm galvanized ring-shank nails	50 mm centres both sides of the panel
Fixing *Kingspan* **TEK**® Building System wall panels at corner joints	4.8 mm x 225 mm FastenMaster Headlok	Typically 350 mm centres for FastenMaster Headlok screws
Fixing *Kingspan* **TEK**® Building System roof sections at wall/floor junctions, ridge beams, intermediate purlins and gable walls	4.8 mm x 225 mm FastenMaster Headlok	Typically 350 mm centres for FastenMaster Headlok screws
Fixing joist hangers to headplate or laminated beams (fixings may vary depending on specification of joist hanger – please refer to manufacturers' instructions floor system)	3.75 mm x 32 mm square twist shank nails or Simpson N10 nails	Into side and top of headplate in locations marked out
Fixing I-beams / joist to joist hanger (fasteners may vary depending on specification of joist hanger – please refer to manufacturers' instructions floor system)	3.75 mm x 32 mm square twist shank nails or Simpson N10 nails	In pre-drilled holes for bottom flange
Fixing OSB3 / P5 floor decking to joists / headplate or header joist	2.8 mm x 63 mm galvanized ring-shank nails	Maximum 200 mm centres
Fixing rim board to headplate	Skew nail 3.75 mm x 75 mm round wire nails	150 mm
Fixing OSB3 / P5 floor decking to joists / rimboard	3.35 mm x 65 mm round wire nails	200 mm
Fixing brickwork cavity wall ties to *Kingspan* **TEK**® Building System wall panels	BTS 50 SCR tie / screw kits (Simpson Strong-Tie BTS 50 & ABC Spax 30 mm x 4.0 mm stainless steel flange head)	Varies with the geographical location of the building. Follow wall tie manufacturer's recommendations.
Fixing treated timber counter battens to *Kingspan* **TEK**® Building System wall / roof panels for ventilation	ABC Spax 5 mm x 60 mm or EJOT M5 70 mm stainless steel screws or equivalent (to penetrate through 15 mm OSB/3 face)	Typically 300 mm centres. For further guidance follow project structural engineers' recommendations

NB. Contact Kingspan TEK® Technical Services Department for further information. Heads of nail fixings should be flush with the surface of the OSB3 / P5 facing.

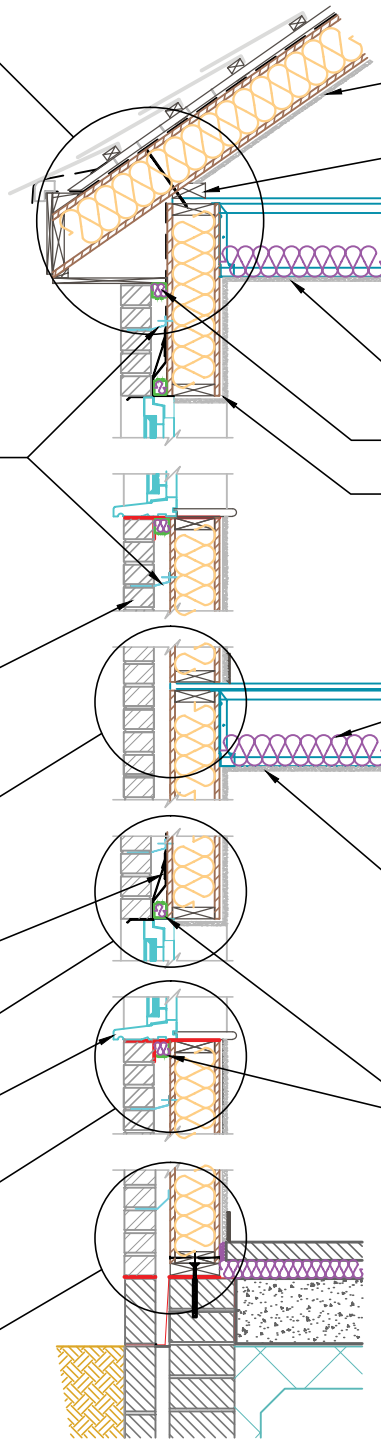

Notes:

1. For further information regarding soleplate/combination soleplate and bottom plate fixings and requirement for additional panel restraint see Fixing Specifications (page 4)
2. Internal floor to provided a minimum Rw of 40dB

Kingspan TEK® Building System

Kingspan Insulation Limited
Pembridge, Leominster,
Herefordshire, HR6 9LA.
Tel: +44 (0)1544 388 601
Fax: +44 (0)1544 388 888
E-mail: info@kingspantek.co.uk

Kingspan Insulation Limited
Bree Ind. Estate, Castleblaney,
Co. Monaghan, Republic of Ireland
Tel: +353(0)42 979 5000
Fax: +353(0)42 975 4299
E-mail: info@kingspantek.ie

www.kingspantek.co.uk

Typical Wall Section

TEK 172

KIL-W1-TEK-172

Date:	
24/09/14	
Drawn by: H.E.	Scale: 1:25

W 1

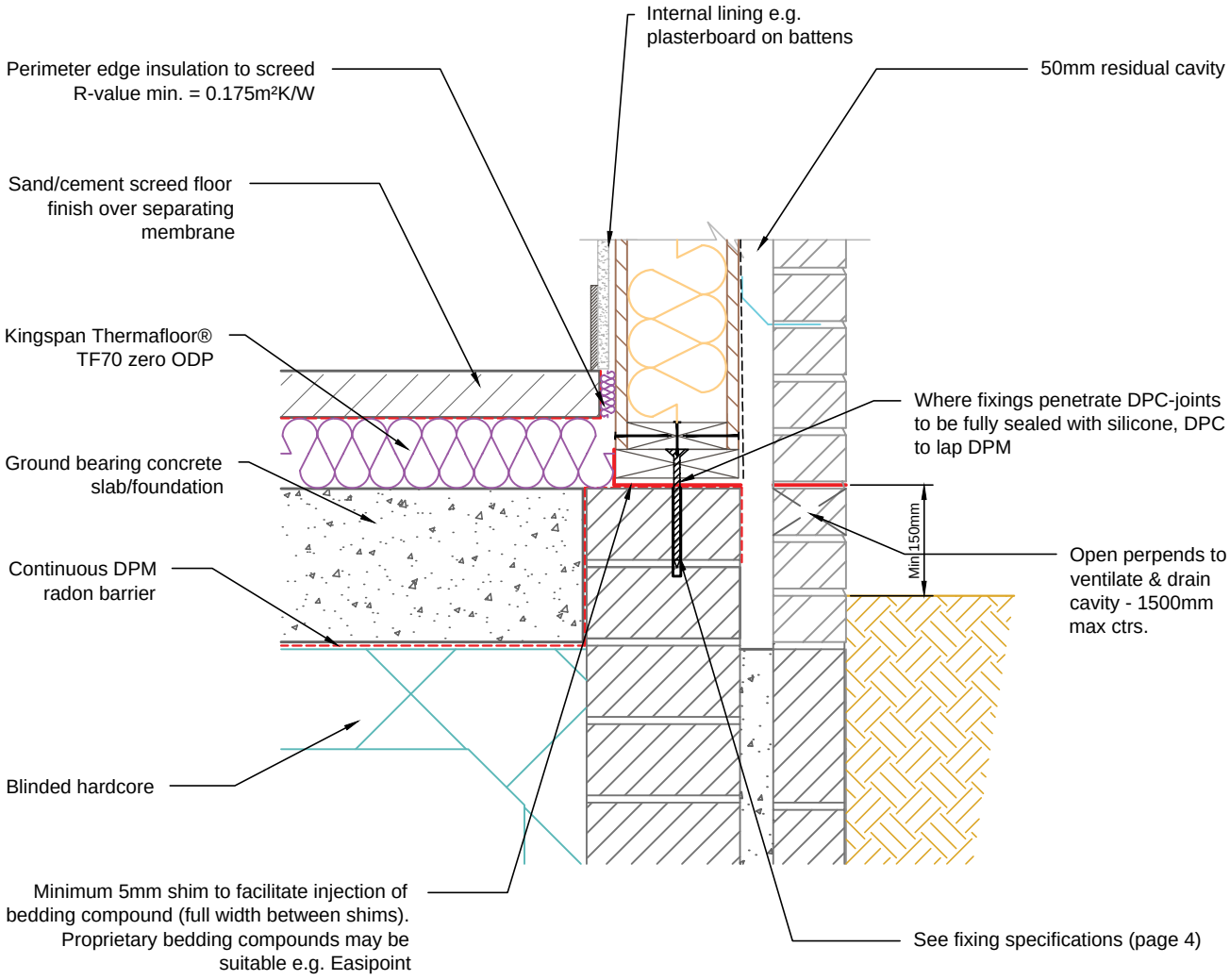

Notes:

1. For further information regarding soleplate/combination soleplate and bottom plate fixings and requirement for additional panel restraint see Fixing Specifications (page 4)
2. Slab should be levelled and shimmed along line of walls to create a level platform for wall construction.

Kingspan TEK® Building System

Kingspan Insulation Limited
Pembridge, Leominster,
Herefordshire, HR6 9LA.
Tel: +44 (0)1544 388 601
Fax: +44 (0)1544 388 888
E-mail: info@kingspantek.co.uk

Kingspan Insulation Limited
Bree Ind. Estate, Castleblaney,
Co. Monaghan, Republic of Ireland
Tel: +353(0)42 979 5000
Fax: +353(0)42 975 4299
E-mail: info@kingspantek.ie

www.kingspantek.co.uk

Sectional Elevation through soleplate fixing detail.

Ground bearing slab.

TEK 172

KIL-W2A-TEK-172

Date:	
24/09/14	
Drawn by: H.E.	Scale: 1:10

W — 2A

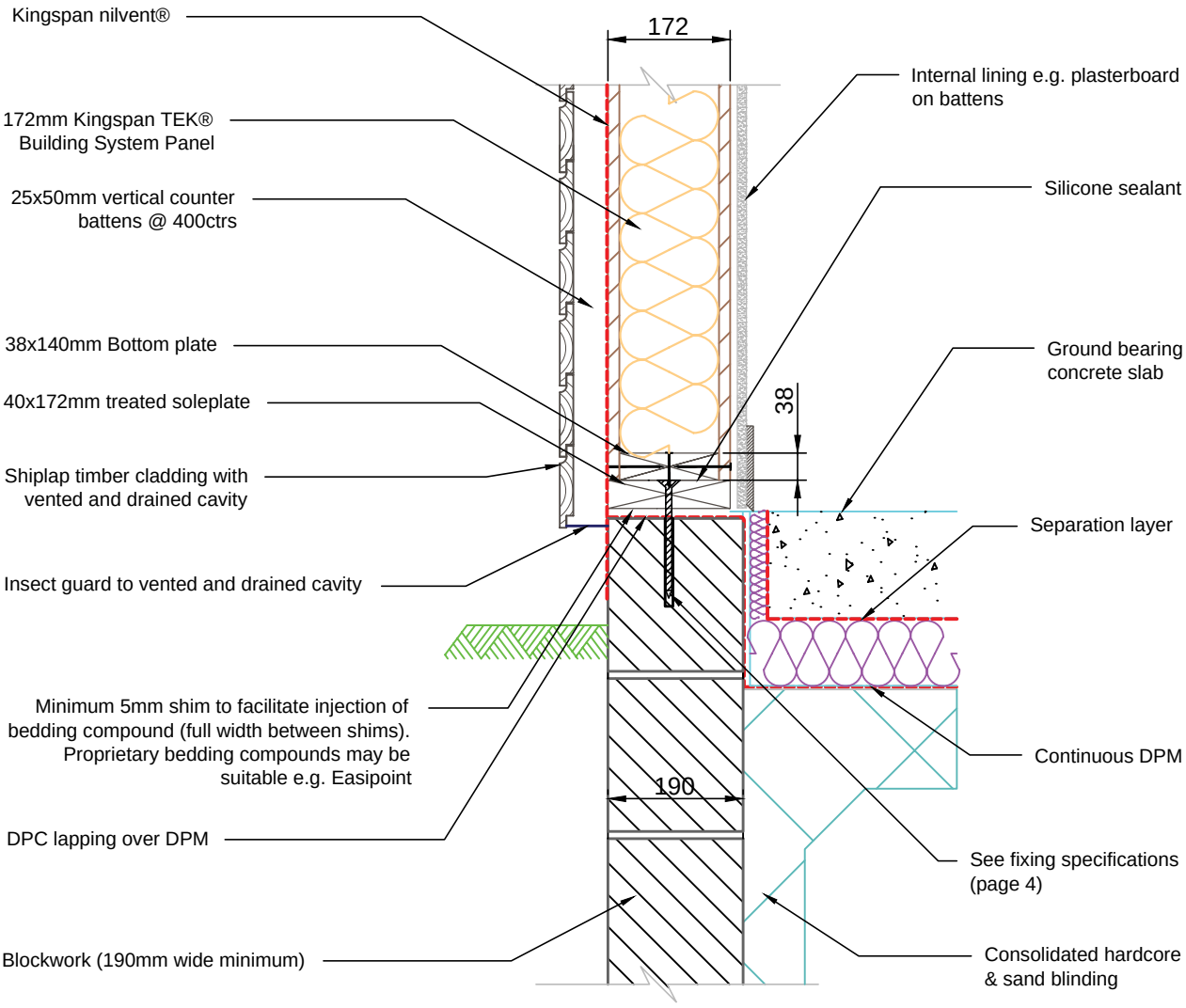

Notes:

1. For further information regarding soleplate/combination soleplate and bottom plate fixings and requirement for additional panel restraint see Fixing Specifications (page 4)

Kingspan TEK® Building System

Kingspan Insulation Limited
Pembridge, Leominster,
Herefordshire, HR6 9LA.
Tel: +44 (0)1544 388 601
Fax: +44 (0)1544 388 888
E-mail: info@kingspantek.co.uk

Kingspan Insulation Limited
Bree Ind. Estate, Castleblaney,
Co. Monaghan, Republic of Ireland
Tel: +353(0)42 979 5000
Fax: +353(0)42 975 4299
E-mail: info@kingspantek.ie

www.kingspantek.co.uk

Typical ground bearing floor slab detail with ventilated cladding.

TEK 172

KIL-W2B-TEK-172

Date:	
24/09/14	
Drawn by: H.E.	Scale: 1:10

W — 2B

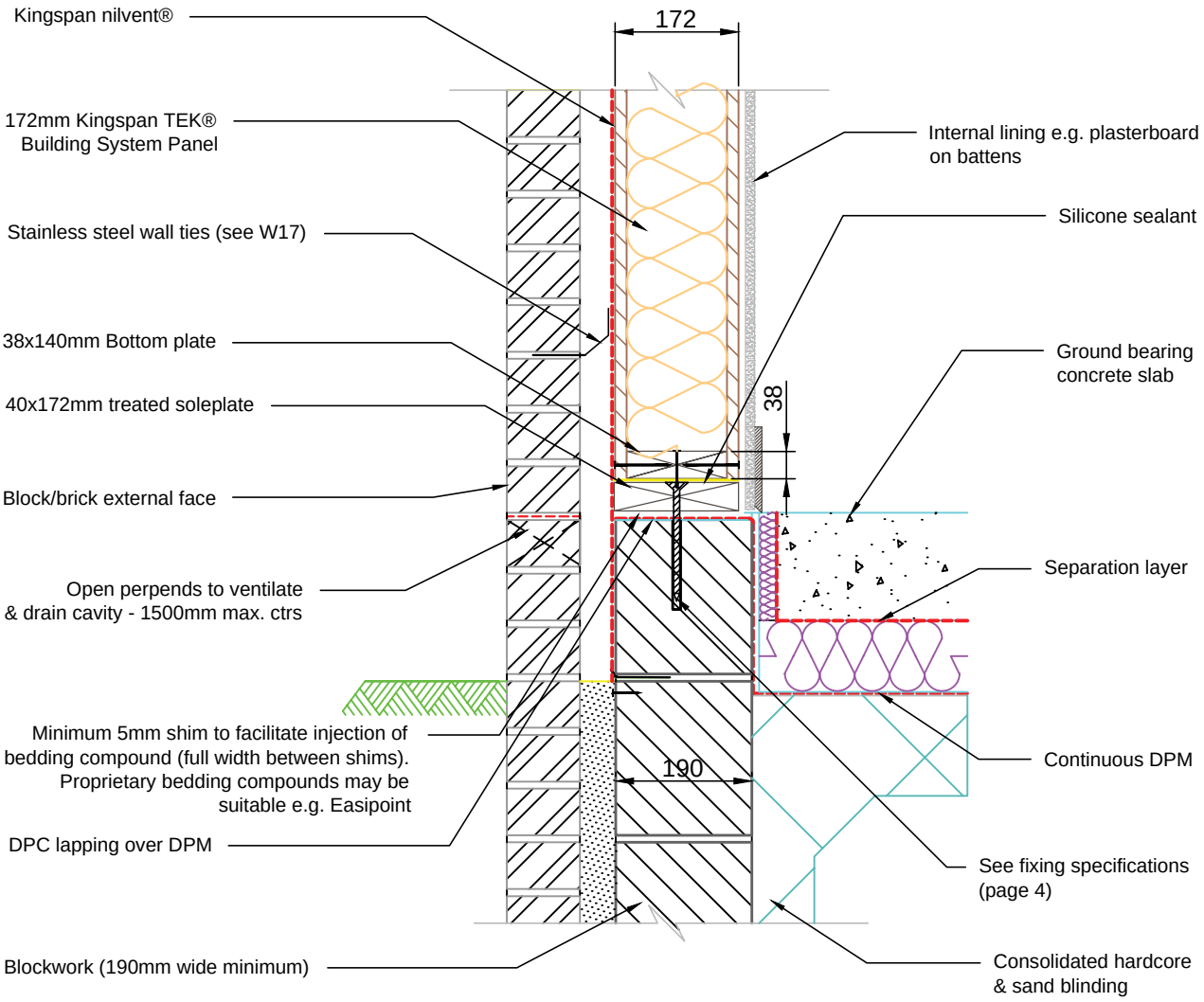

Notes:

1. For further information regarding soleplate/combination soleplate and bottom plate fixings and requirement for additional panel restraint see Fixing Specifications (page 4)

Kingspan TEK Building System

Kingspan Insulation Limited
Pembridge, Leominster,
Herefordshire, HR6 9LA.
Tel: +44 (0)1544 388 601
Fax: +44 (0)1544 388 888
E-mail: info@kingspantek.co.uk

Kingspan Insulation Limited
Bree Ind. Estate, Castleblaney,
Co. Monaghan, Republic of Ireland
Tel: +353(0)42 979 5000
Fax: +353(0)42 975 4299
E-mail: info@kingspantek.ie

www.kingspantek.co.uk

Typical ground bearing floor slab detail with blockwork wall.

TEK 172

KIL-W2C-TEK-172

Date:	
08/10/14	
Drawn by: H.E.	Scale: 1:10

W — 2C

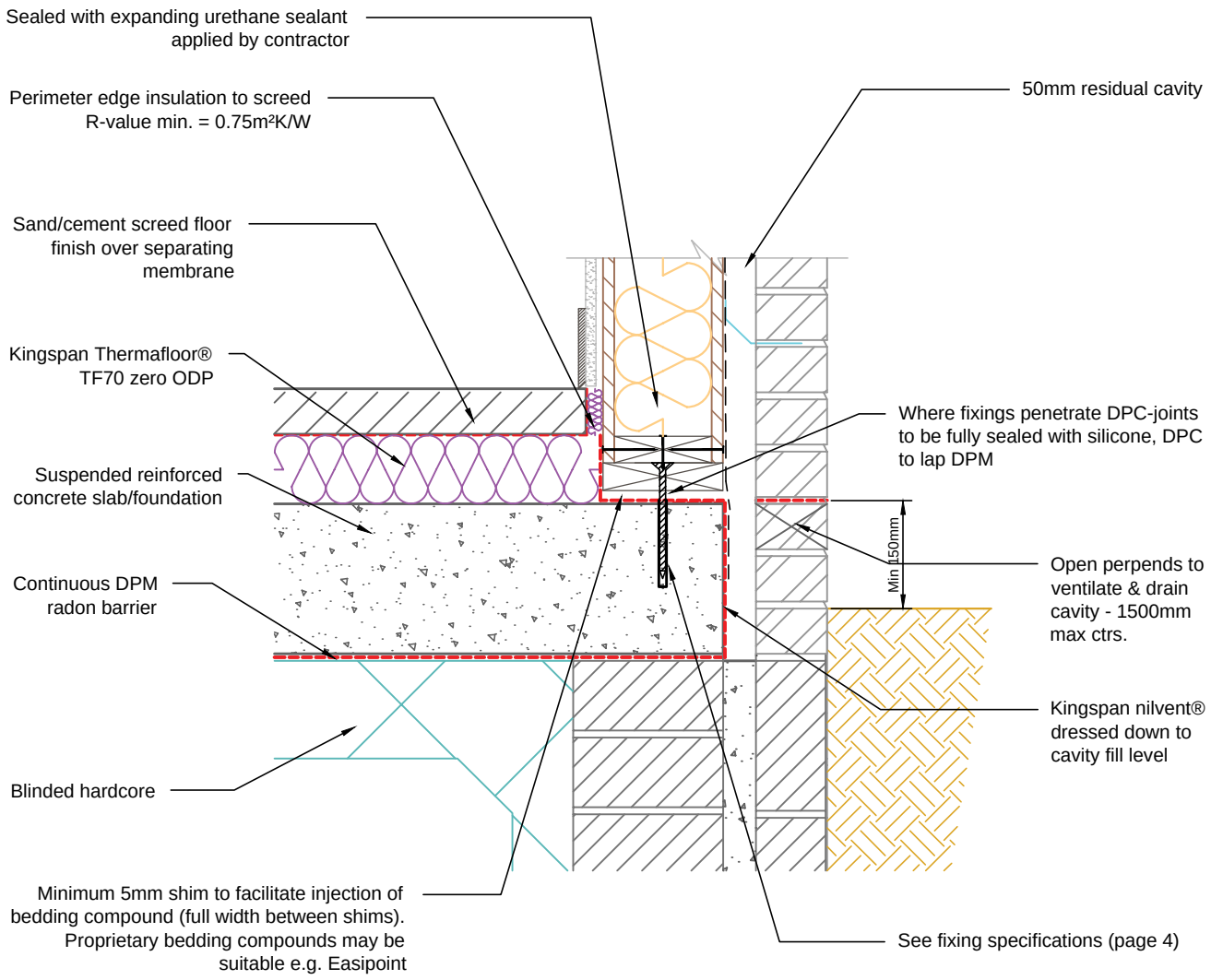

Notes:

1. For further information regarding soleplate/combination soleplate and bottom plate fixings and requirement for additional panel restraint see Fixing Specifications (page 4)
2. Slab should be leveled and shimmed along line of walls to create a level platform for wall construction.

Kingspan TEK Building System

Kingspan Insulation Limited
Pembridge, Leominster,
Herefordshire, HR6 9LA.
Tel: +44 (0)1544 388 601
Fax: +44 (0)1544 388 888
E-mail: info@kingspantek.co.uk

Kingspan Insulation Limited
Bree Ind. Estate, Castleblaney,
Co. Monaghan, Republic of Ireland
Tel: +353(0)42 979 5000
Fax: +353(0)42 975 4299
E-mail: info@kingspantek.ie

www.kingspantek.co.uk

Sectional Elevation through soleplate fixing detail.

Suspended reinforced concrete slab.

TEK 172

KIL-W3A-TEK-172

Date:	
24/09/14	
Drawn by: H.E.	Scale: 1:10

W — 3A

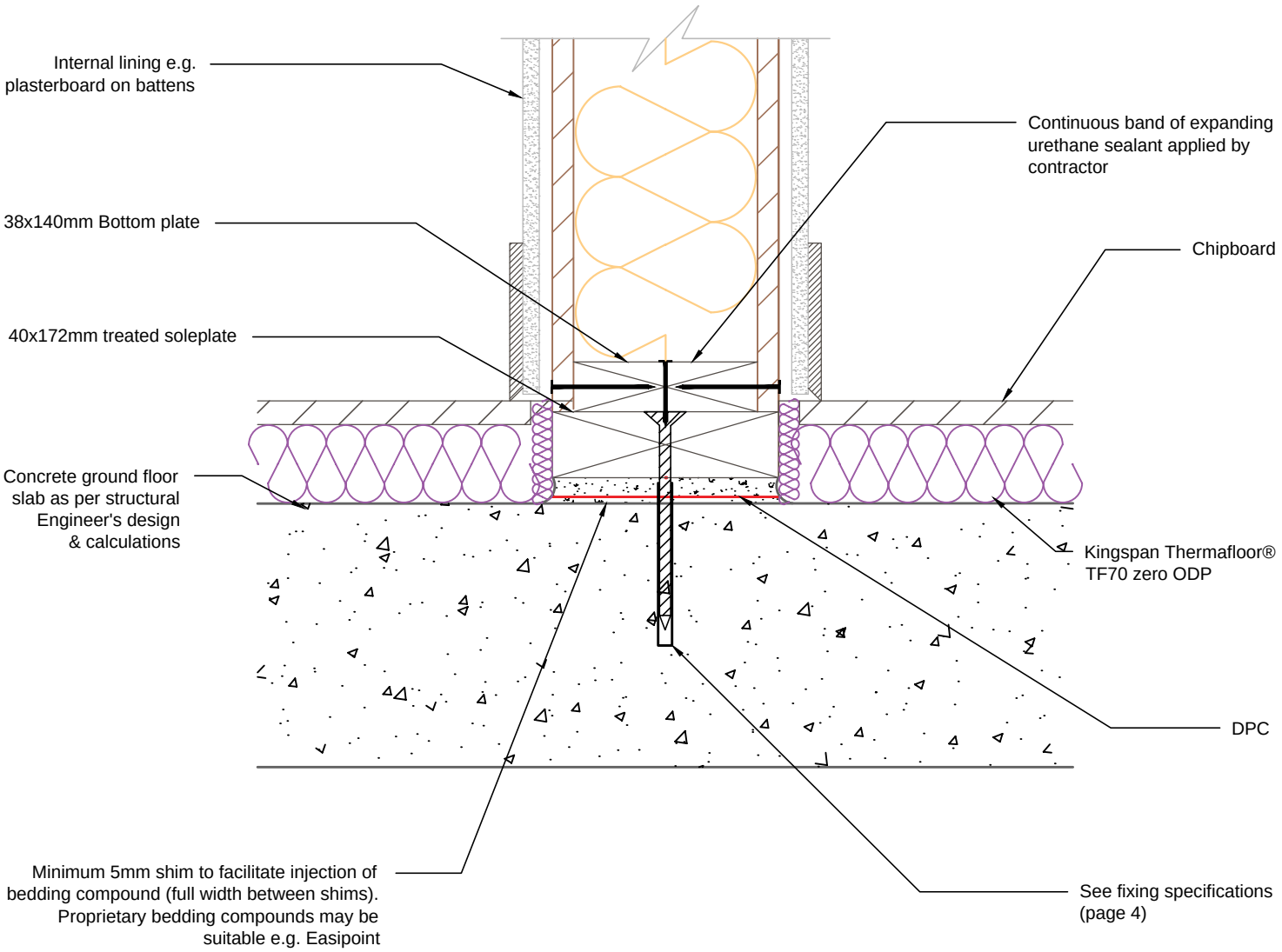

Notes:

1. For further information regarding soleplate/combination soleplate and bottom plate fixings and requirement for additional panel restraint see Fixing Specifications (page 4)
2. Slab should be levelled and shimmed along line of walls to create level platform for wall construction.

Kingspan TEK Building System

Kingspan Insulation Limited
Pembridge, Leominster,
Herefordshire, HR6 9LA.
Tel: +44 (0)1544 388 601
Fax: +44 (0)1544 388 888
E-mail: info@kingspantek.co.uk

Kingspan Insulation Limited
Bree Ind. Estate, Castleblaney,
Co. Monaghan, Republic of Ireland
Tel: +353(0)42 979 5000
Fax: +353(0)42 975 4299
E-mail: info@kingspantek.ie

www.kingspantek.co.uk

Sectional elevation through wall junction with ground floor slab.

TEK 172

KIL-W3B-TEK-172

Date:	
08/10/14	
Drawn by: H.E.	Scale: 1:5

W — 3B

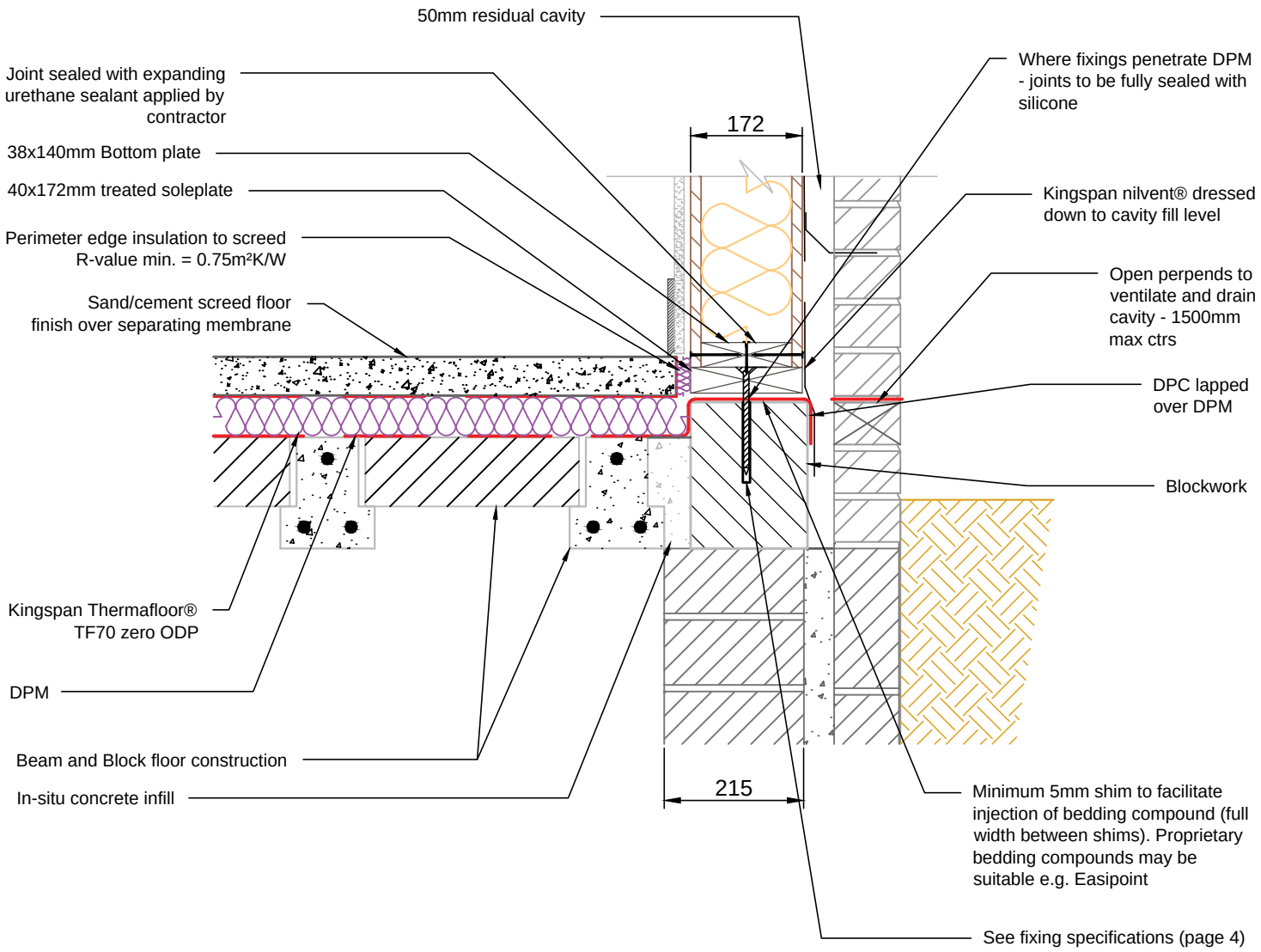

Notes:

1. For further information regarding soleplate/combination soleplate and bottom plate fixings and requirement for additional panel restraint see Fixing Specifications (page 4)

Kingspan TEK® Building System

Kingspan Insulation Limited
Pembridge, Leominster,
Herefordshire, HR6 9LA.
Tel: +44 (0)1544 388 601
Fax: +44 (0)1544 388 888
E-mail: info@kingspantek.co.uk

Kingspan Insulation Limited
Bree Ind. Estate, Castleblaney,
Co. Monaghan, Republic of Ireland
Tel: +353(0)42 979 5000
Fax: +353(0)42 975 4299
E-mail: info@kingspantek.ie

www.kingspantek.co.uk

Sectional elevation through beam and block floor

TEK 172

KIL-W4A-TEK-172

Date: 09/10/14

Drawn by: H.E.

Scale: 1:10

W — 4A

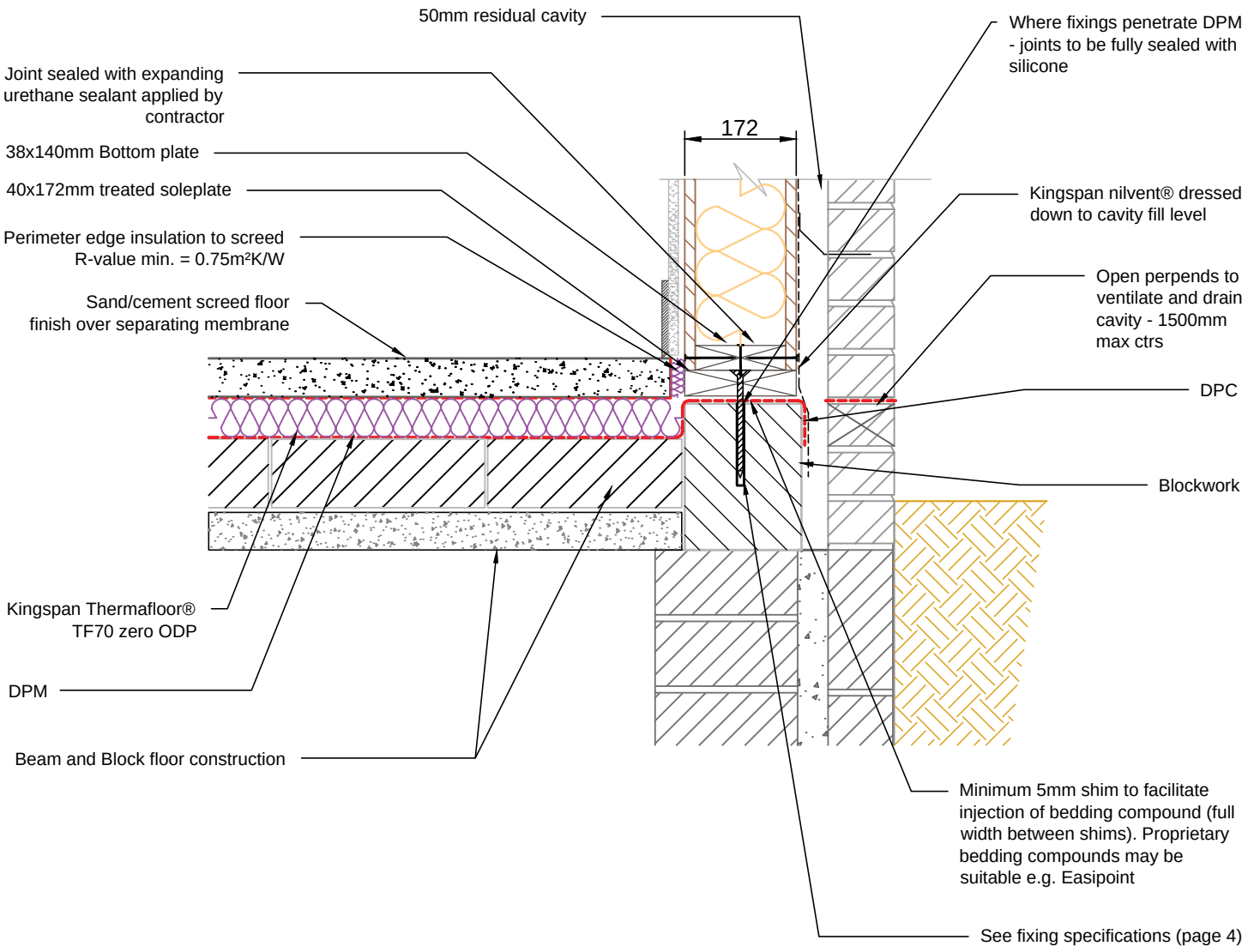

Notes:

1. For further information regarding soleplate/combination soleplate and bottom plate fixings and requirement for additional panel restraint see Fixing Specifications (page 4)

Kingspan Insulation Limited
Pembridge, Leominster,
Herefordshire, HR6 9LA.
Tel: +44 (0)1544 388 601
Fax: +44 (0)1544 388 888
E-mail: info@kingspantek.co.uk

Kingspan Insulation Limited
Bree Ind. Estate, Castleblaney,
Co. Monaghan, Republic of Ireland
Tel: +353(0)42 979 5000
Fax: +353(0)42 975 4299
E-mail: info@kingspantek.ie

www.kingspantek.co.uk

Sectional elevation through beam and block floor support

TEK 172

KIL-W4B-TEK-172

Date: 09/10/14

Drawn by: H.E.

Scale: 1:10

W — 4B

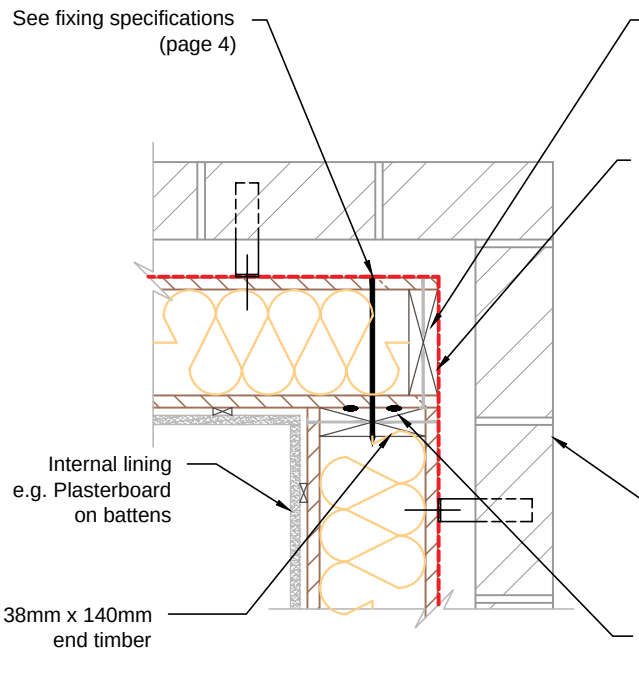

W5A-Int
Normal/Internal corner

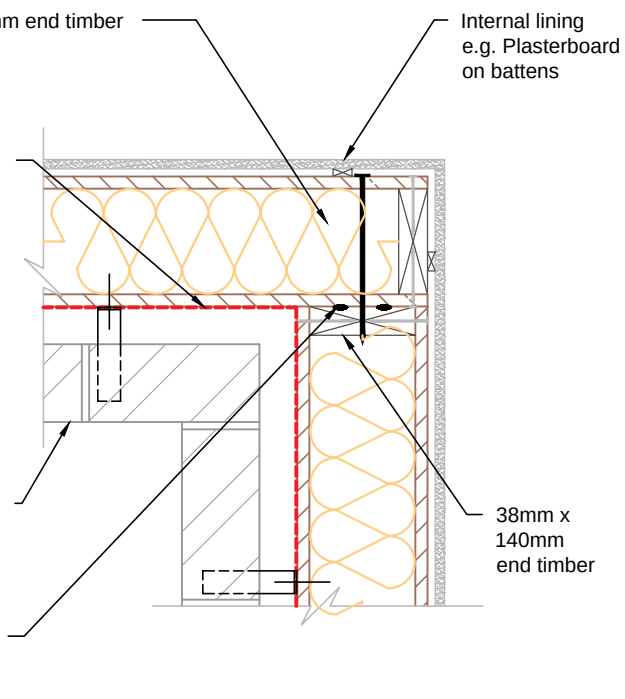

W5A-Ext
Inverted/External corner

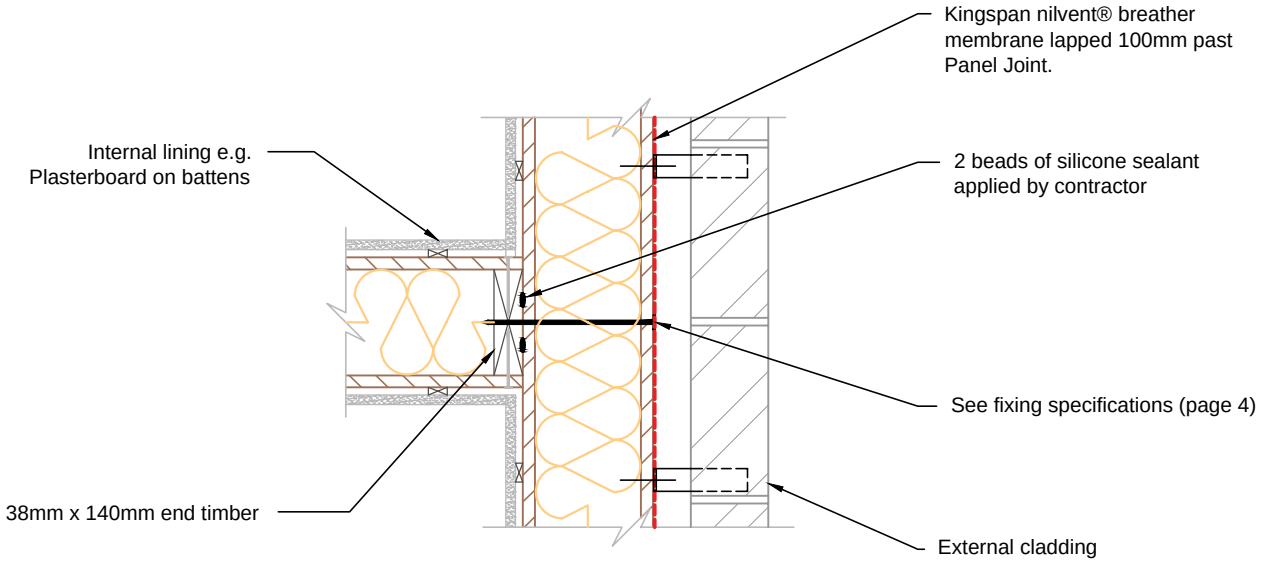

W5B
Internal/external wall junction

Kingspan TEK Building System

Kingspan Insulation Limited
Pembridge, Leominster,
Herefordshire, HR6 9LA.
Tel: +44 (0)1544 388 601
Fax: +44 (0)1544 388 888
E-mail: info@kingspantek.co.uk

Kingspan Insulation Limited
Bree Ind. Estate, Castleblaney,
Co. Monaghan, Republic of Ireland
Tel: +353(0)42 979 5000
Fax: +353(0)42 975 4299
E-mail: info@kingspantek.ie

www.kingspantek.co.uk

Plan showing typical wall connection detail

Corner & T-junction

TEK 172

KIL-W5-TEK-172

Date:	
09/10/14	
Drawn by: H.E.	Scale: 1:10

W 5

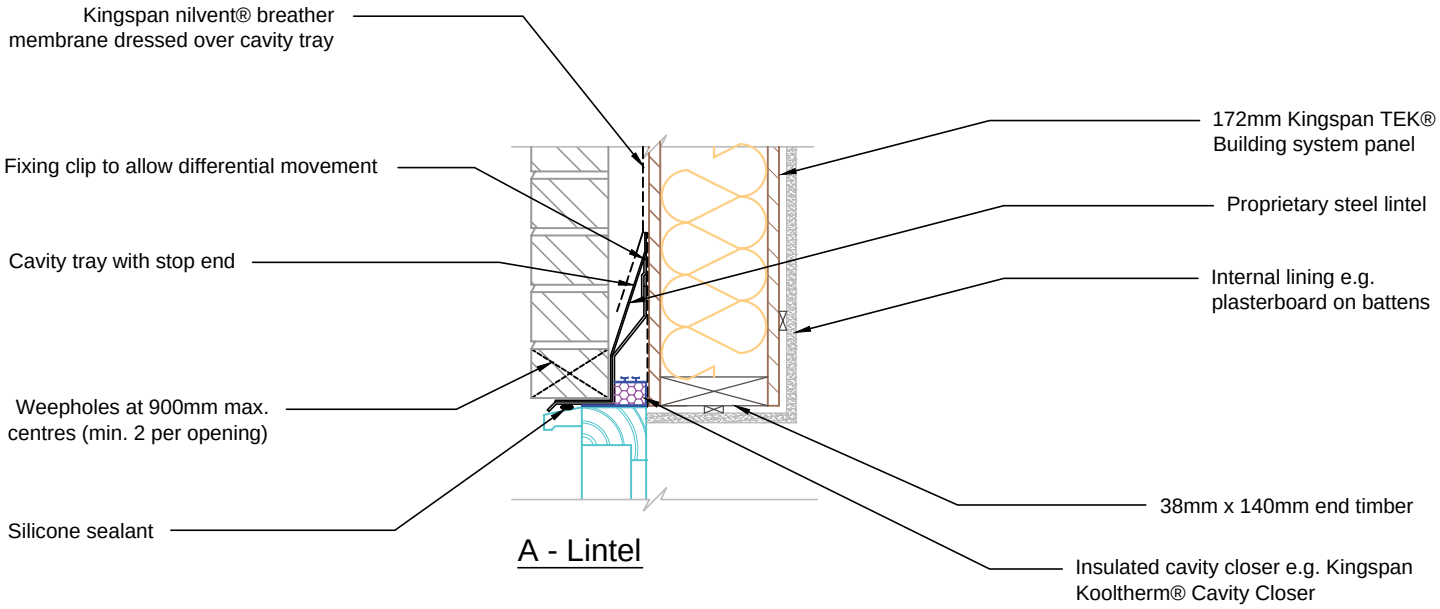

A - Lintel

NB - Restraint clips typically required @ 600mm ctrs along top edge of lintel.
Fixings to be used in accordance with lintel manufacturer's recommendations

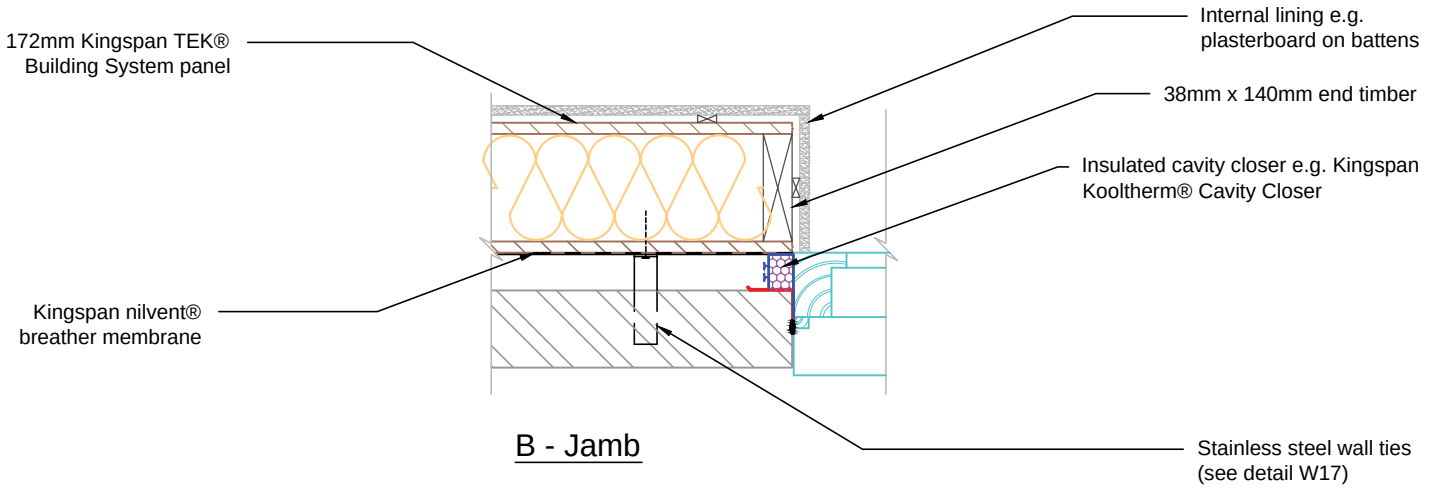

B - Jamb

Kingspan TEK Building System

Kingspan Insulation Limited
Pembridge, Leominster,
Herefordshire, HR6 9LA.
Tel: +44 (0)1544 388 601
Fax: +44 (0)1544 388 888
E-mail: info@kingspantek.co.uk

Kingspan Insulation Limited
Bree Ind. Estate, Castleblaney,
Co. Monaghan, Republic of Ireland
Tel: +353(0)42 979 5000
Fax: +353(0)42 975 4299
E-mail: info@kingspantek.ie

www.kingspantek.co.uk

Typical window detail - brickwork
external leaf detail
TEK 172

KIL-W6-TEK-172

Date:	
09/10/14	
Drawn by: H.E.	Scale: 1:10

W 6

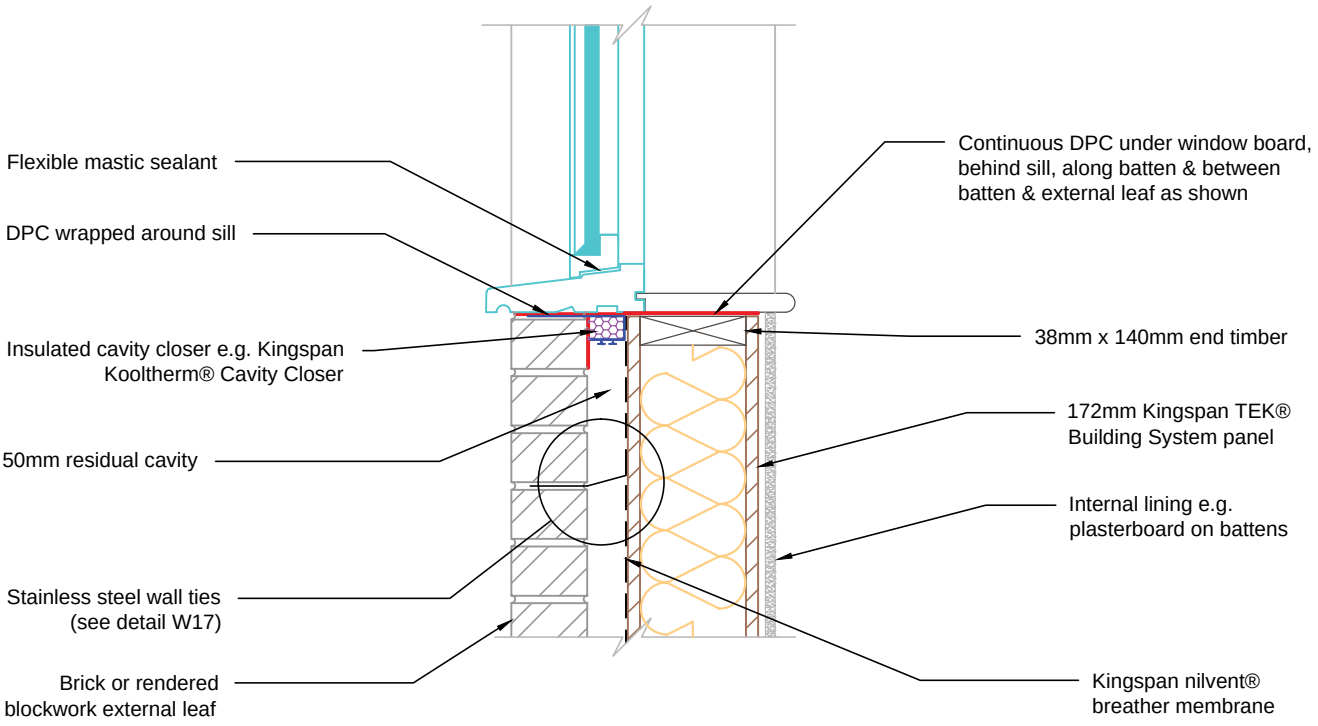

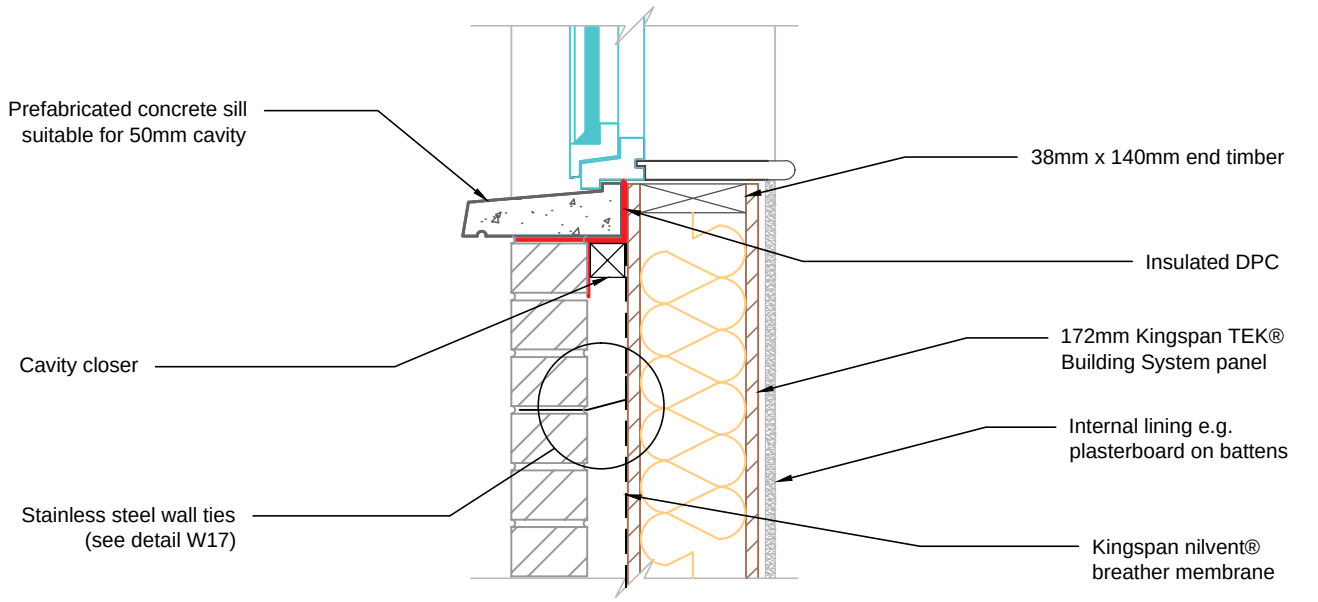

Kingspan TEK® Building System

Kingspan Insulation Limited
Pembridge, Leominster,
Herefordshire, HR6 9LA.
Tel: +44 (0)1544 388 601
Fax: +44 (0)1544 388 888
E-mail: info@kingspantek.co.uk

Kingspan Insulation Limited
Bree Ind. Estate, Castleblaney,
Co. Monaghan, Republic of Ireland
Tel: +353(0)42 979 5000
Fax: +353(0)42 975 4299
E-mail: info@kingspantek.ie

www.kingspantek.co.uk

Typical section at window sill - brickwork external leaf detail

TEK 172

KIL-W7-TEK-172

Date:	
09/10/14	
Drawn by: H.E.	Scale: 1:10

W 7

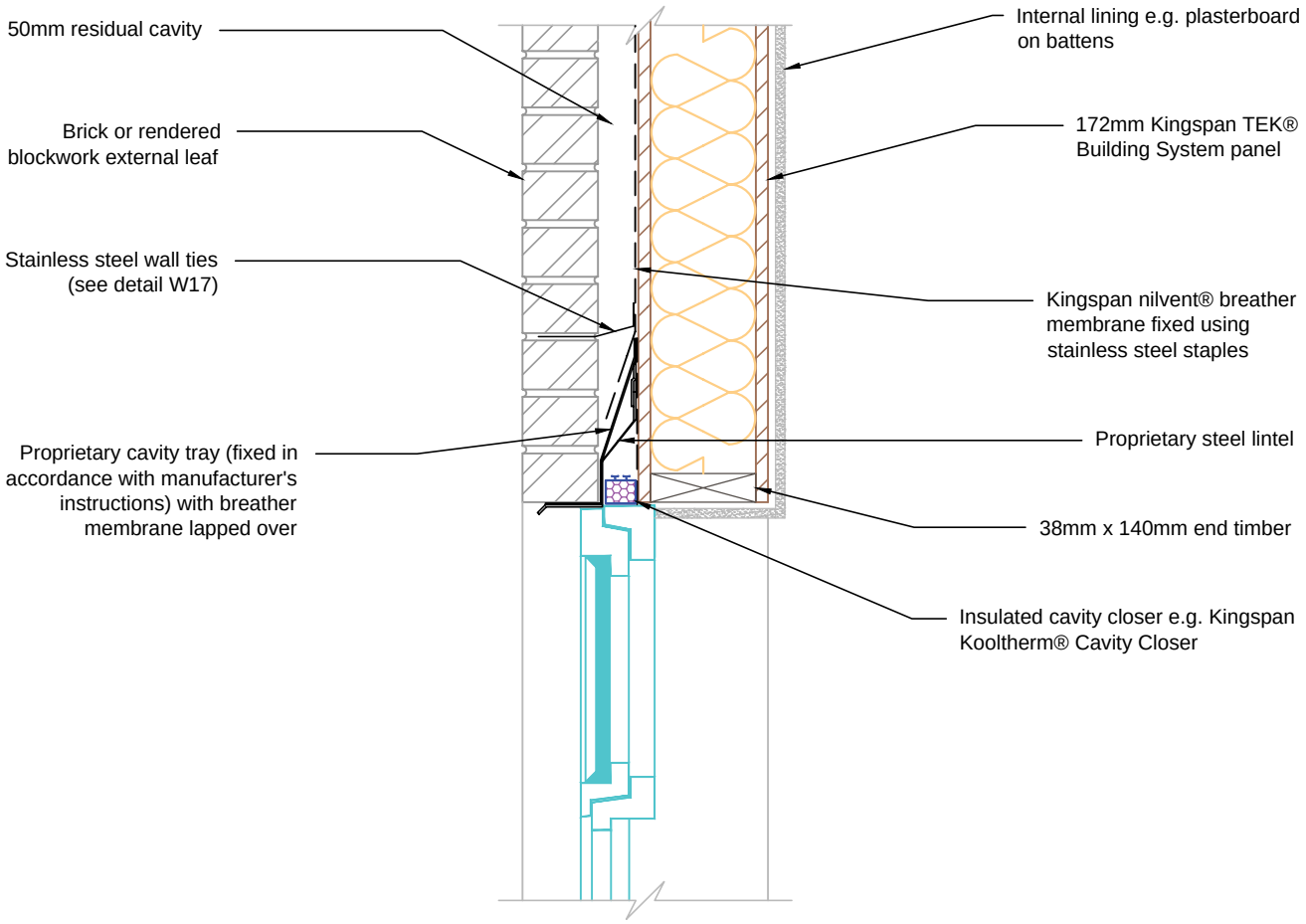

Notes:

1. Restraint clips typically required @ 600mm ctrs along top edge of lintel. Fixings to be used in accordance with lintel manufacturer's recommendations.

Kingspan TEK® Building System

Kingspan Insulation Limited
Pembridge, Leominster,
Herefordshire, HR6 9LA.
Tel: +44 (0)1544 388 601
Fax: +44 (0)1544 388 888
E-mail: info@kingspantek.co.uk

Kingspan Insulation Limited
Bree Ind. Estate, Castleblaney,
Co. Monaghan, Republic of Ireland
Tel: +353(0)42 979 5000
Fax: +353(0)42 975 4299
E-mail: info@kingspantek.ie

www.kingspantek.co.uk

Typical section at window head - brickwork external leaf detail

TEK 172

KIL-W8-TEK-172

Date:	
09/10/14	
Drawn by: H.E.	Scale: 1:10

W — 8

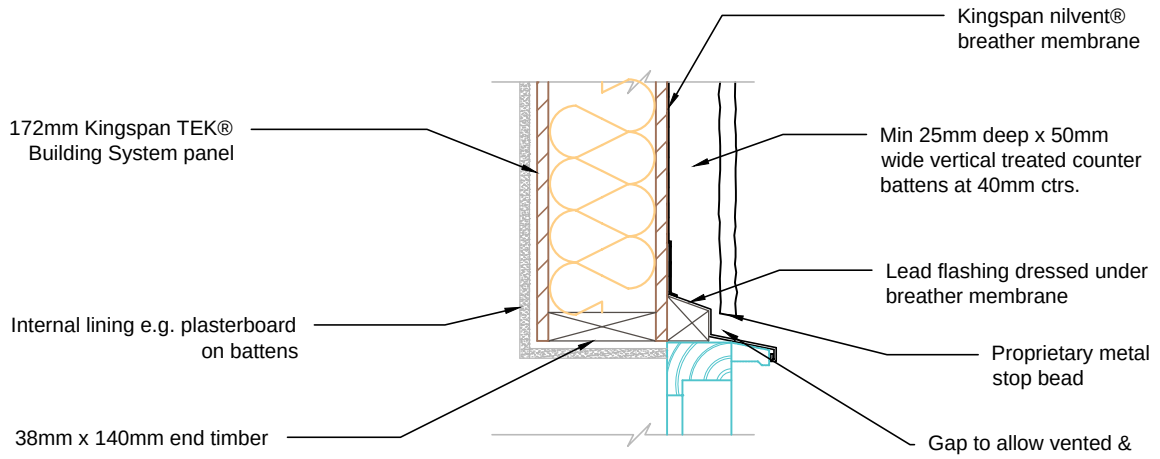

W9A - Lintel

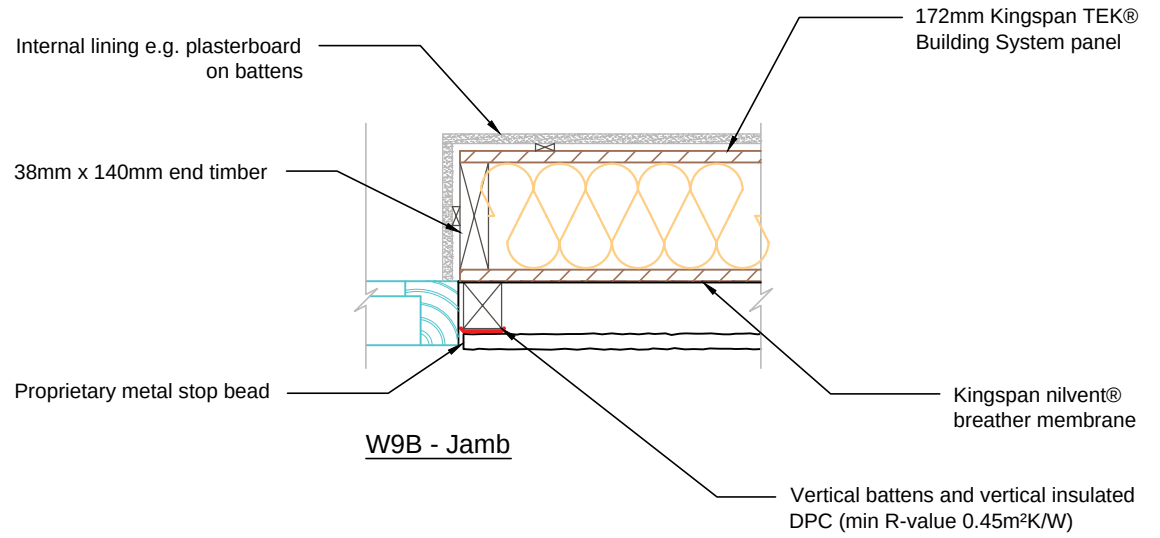

W9B - Jamb

Notes:

1. Restraint clips typically required @ 600mm ctrs along top edge of lintel. Fixings to be used in accordance with lintel manufacturer's recommendations.

Kingspan TEK® Building System

Kingspan Insulation Limited
Pembridge, Leominster,
Herefordshire, HR6 9LA.
Tel: +44 (0)1544 388 601
Fax: +44 (0)1544 388 888
E-mail: info@kingspantek.co.uk

Kingspan Insulation Limited
Bree Ind. Estate, Castleblaney,
Co. Monaghan, Republic of Ireland
Tel: +353(0)42 979 5000
Fax: +353(0)42 975 4299
E-mail: info@kingspantek.ie

www.kingspantek.co.uk

Typical window detail - ventilated cladding cavity

TEK 172

KIL-W9TEK-172

Date:	
10/10/14	
Drawn by: H.E.	Scale: 1:10

W 9

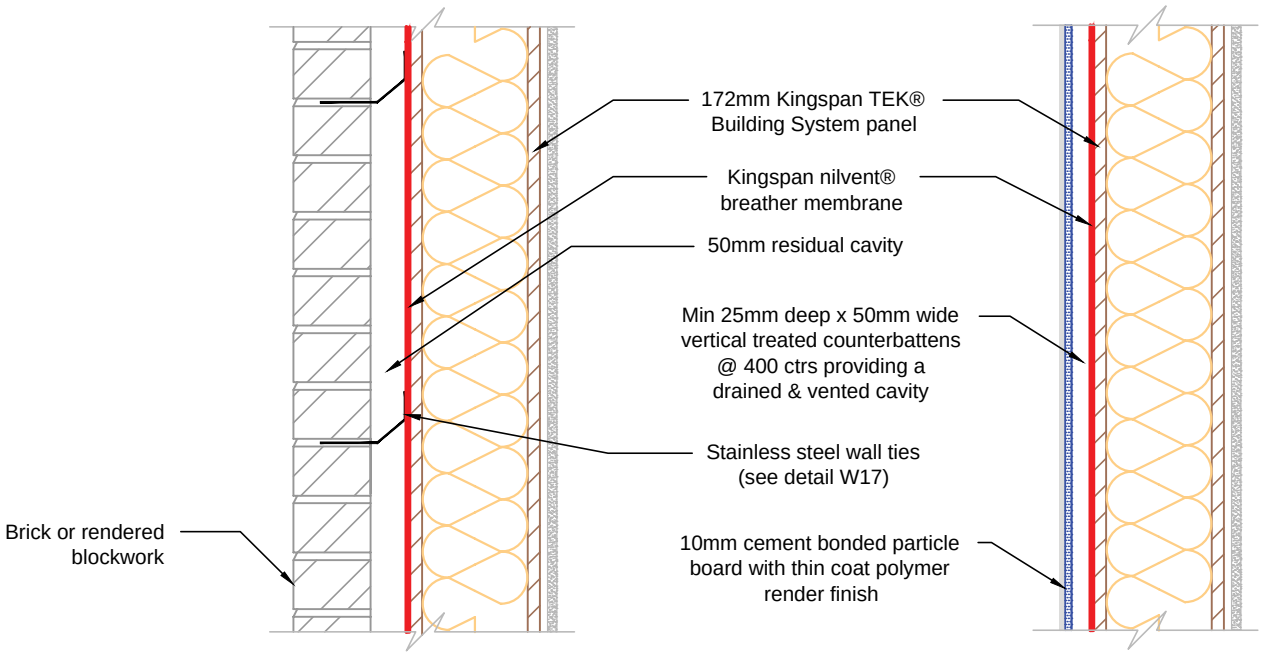

Brick cavity finish

Thin coat polymer render on vertical battens

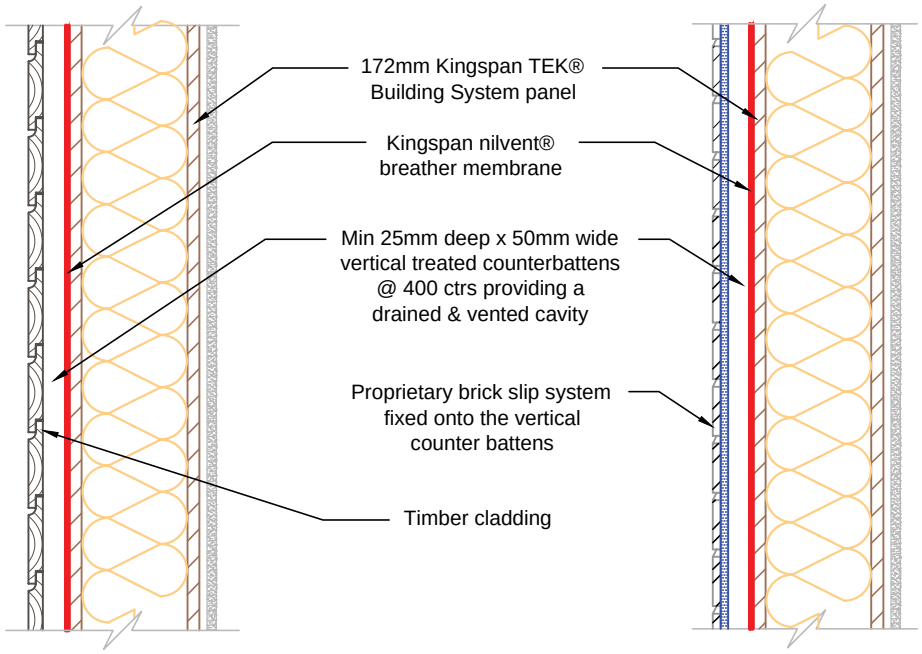

Horizontal timber cladding finish on vertical battens

Proprietary brick slip finish on vertical battens

N.B. Screw fixings can be inserted directky into OSB3 skins

Kingspan TEK® Building System

Kingspan Insulation Limited
Pembridge, Leominster,
Herefordshire, HR6 9LA.
Tel: +44 (0)1544 388 601
Fax: +44 (0)1544 388 888
E-mail: info@kingspantek.co.uk

Kingspan Insulation Limited
Bree Ind. Estate, Castleblaney,
Co. Monaghan, Republic of Ireland
Tel: +353(0)42 979 5000
Fax: +353(0)42 975 4299
E-mail: info@kingspantek.ie

www.kingspantek.co.uk

Standard external finishes

TEK 172

KIL-W10-TEK-172

Date:	
10/10/14	
Drawn by: H.E.	Scale: 1:10

W 10

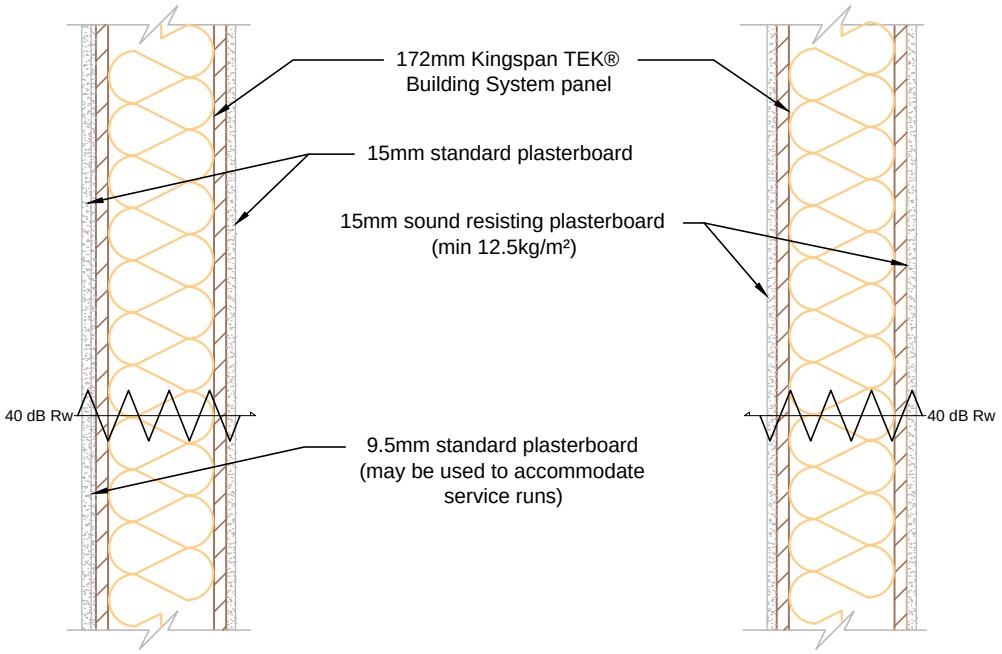

Preferred internal wall construction (1)
(Rw = 40dB - See SRL test report C/03/5L/0848/1)

Preferred internal wall construction (2)
(Rw = 40dB - See BTC 13505 test report)

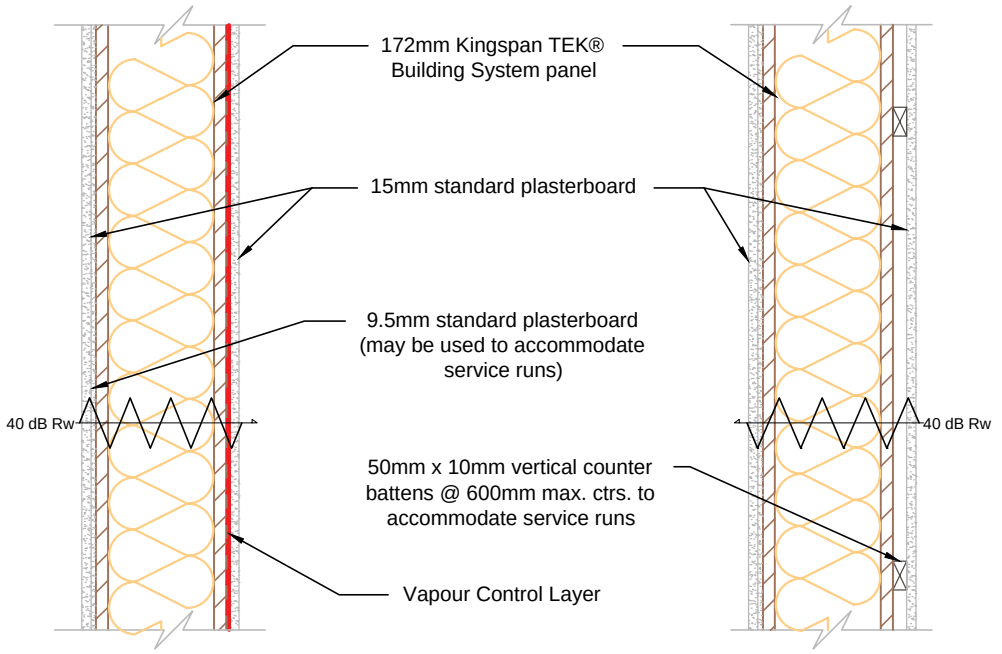

Alternative wall construction with plasterboard & vapour control layer

Alternative wall construction with plasterboard fixed on counter battens

N.B. Screw fixings can be inserted directky into OSB3 skins

Kingspan TEK® Building System

Kingspan Insulation Limited
Pembridge, Leominster,
Herefordshire, HR6 9LA.
Tel: +44 (0)1544 388 601
Fax: +44 (0)1544 388 888
E-mail: info@kingspantek.co.uk

Kingspan Insulation Limited
Bree Ind. Estate, Castleblaney,
Co. Monaghan, Republic of Ireland
Tel: +353(0)42 979 5000
Fax: +353(0)42 975 4299
E-mail: info@kingspantek.ie

www.kingspantek.co.uk

Plan view of internal Kingspan TEK® Building System Walls

TEK 172

KIL-W11-TEK-172

Date:	
10/10/14	
Drawn by: H.E.	Scale: 1:10

W 11

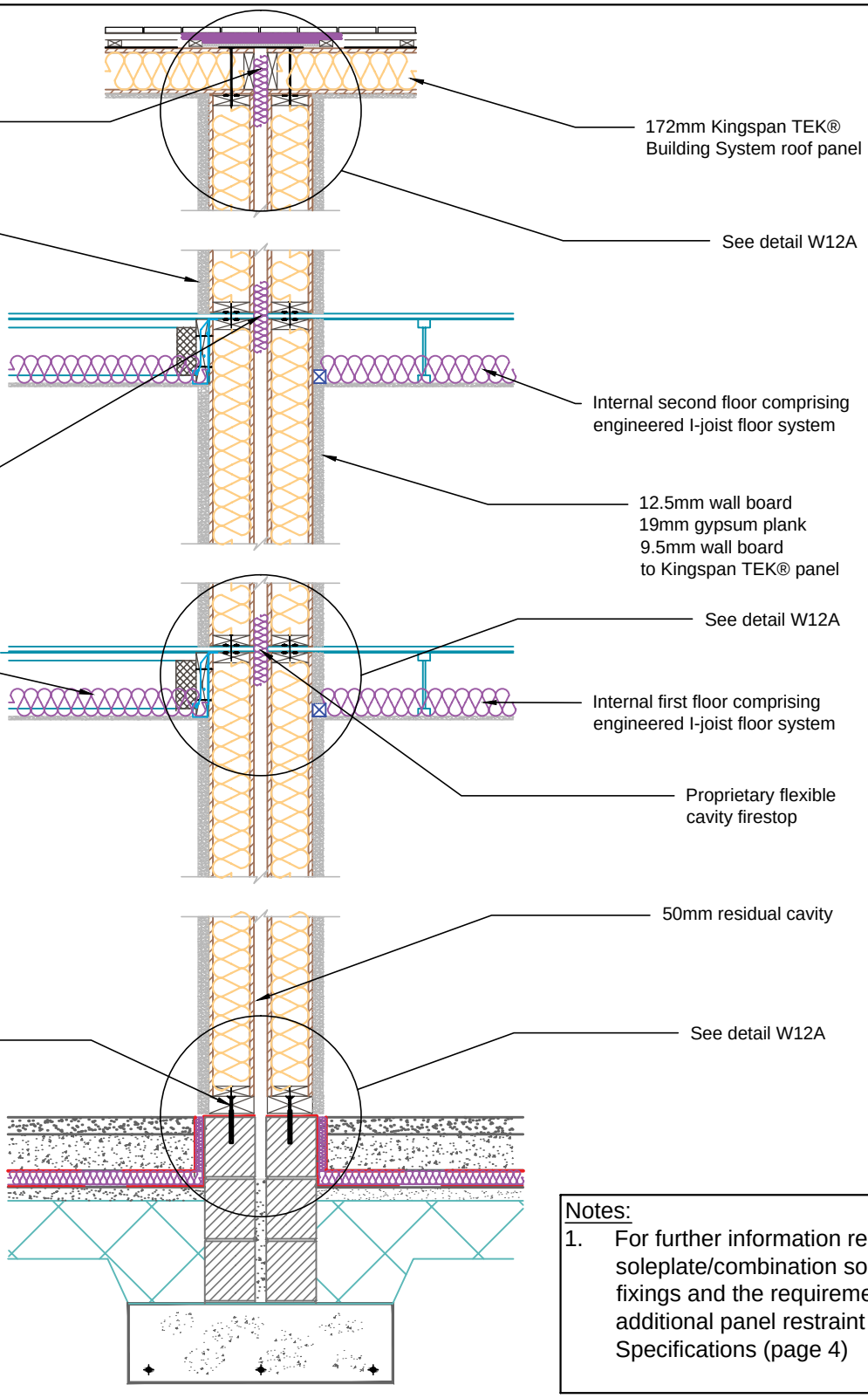

Notes:

1. For further information regarding soleplate/combination soleplate fixings and the requirement for additional panel restraint see Fixing Specifications (page 4)

Kingspan TEK Building System

Kingspan Insulation Limited
Pembridge, Leominster,
Herefordshire, HR6 9LA.
Tel: +44 (0)1544 388 601
Fax: +44 (0)1544 388 888
E-mail: info@kingspantek.co.uk

Kingspan Insulation Limited
Bree Ind. Estate, Castleblaney,
Co. Monaghan, Republic of Ireland
Tel: +353(0)42 979 5000
Fax: +353(0)42 975 4299
E-mail: info@kingspantek.ie

www.kingspantek.co.uk

Typical separating wall section incorporating room in roof

TEK 172

KIL-W12-TEK-172

Date:	
10/10/14	
Drawn by: H.E.	Scale: 1:25

W — 12

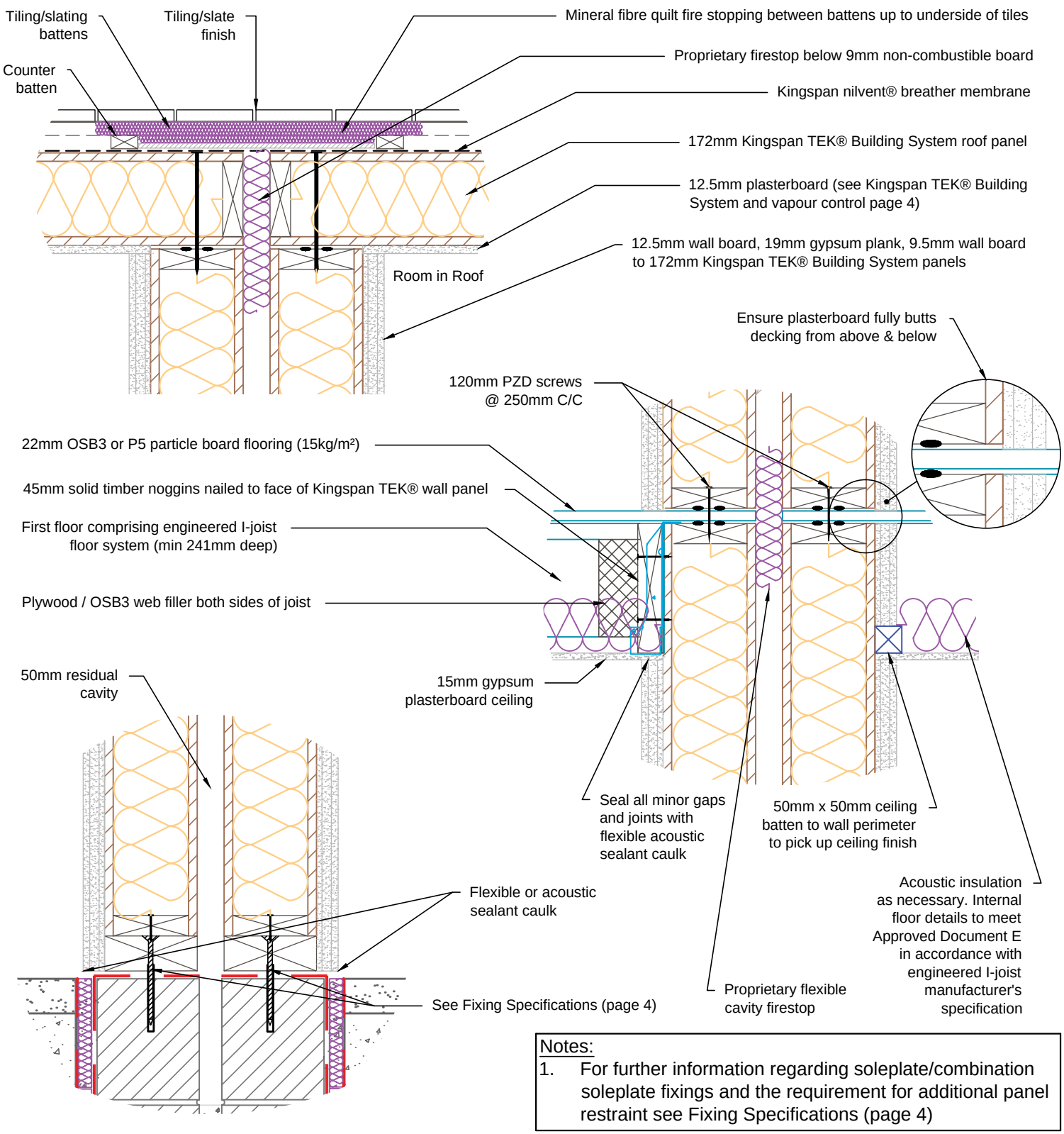

Notes:

1. For further information regarding soleplate/combination soleplate fixings and the requirement for additional panel restraint see Fixing Specifications (page 4)

Kingspan TEK Building System

Kingspan Insulation Limited
Pembridge, Leominster,
Herefordshire, HR6 9LA.
Tel: +44 (0)1544 388 601
Fax: +44 (0)1544 388 888
E-mail: info@kingspantek.co.uk

Kingspan Insulation Limited
Bree Ind. Estate, Castleblaney,
Co. Monaghan, Republic of Ireland
Tel: +353(0)42 979 5000
Fax: +353(0)42 975 4299
E-mail: info@kingspantek.ie

www.kingspantek.co.uk

Section through typical separating wall & internal floor assemblies incorporating room in roof.

TEK 172

KIL-W12A-TEK-172

Date:	
13/10/14	
Drawn by: H.E.	Scale: 1:10

W — 12A

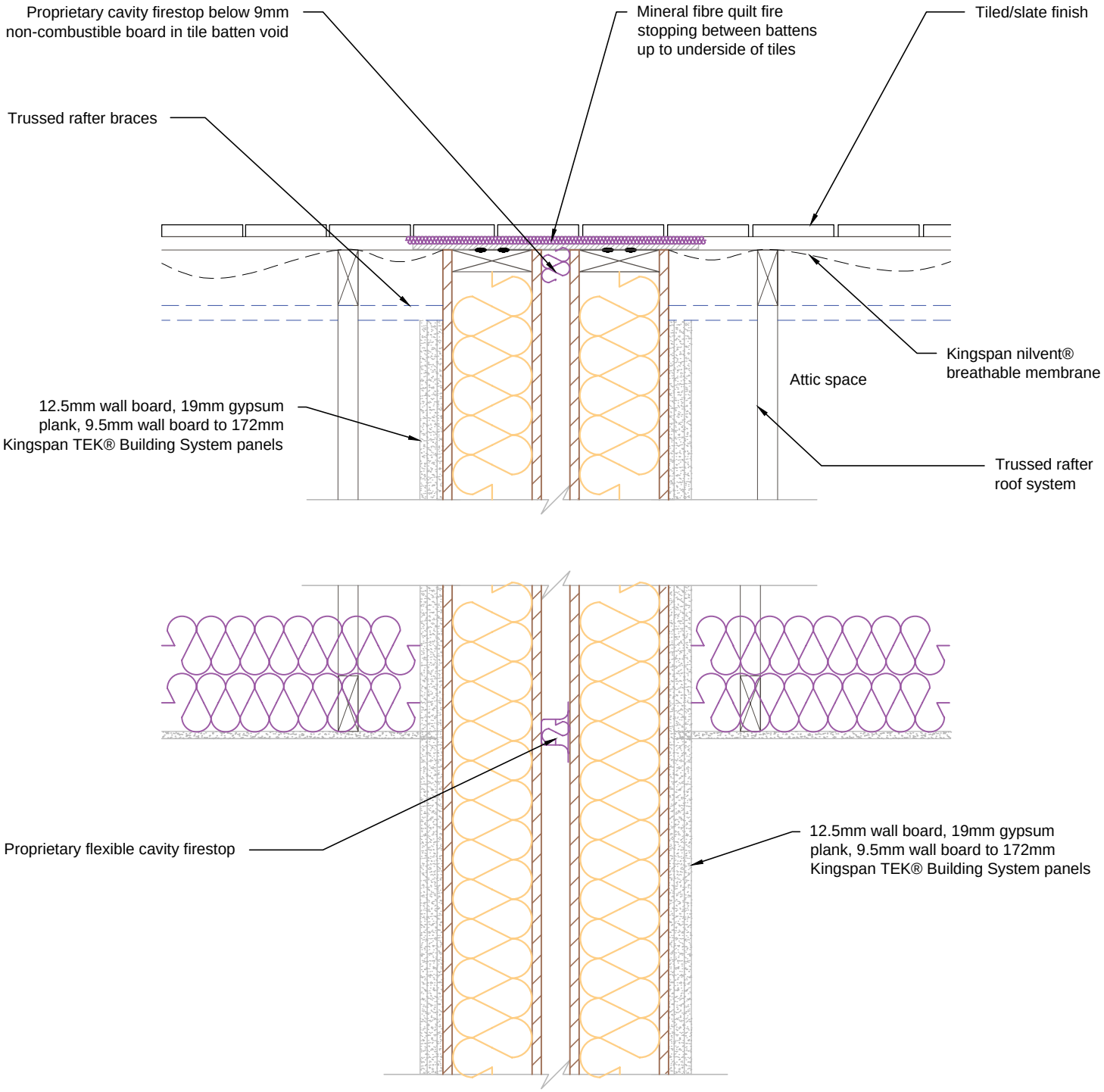

Kingspan TEK® Building System

Kingspan Insulation Limited
Pembridge, Leominster,
Herefordshire, HR6 9LA.
Tel: +44 (0)1544 388 601
Fax: +44 (0)1544 388 888
E-mail: info@kingspantek.co.uk

Kingspan Insulation Limited
Bree Ind. Estate, Castleblaney,
Co. Monaghan, Republic of Ireland
Tel: +353(0)42 979 5000
Fax: +353(0)42 975 4299
E-mail: info@kingspantek.ie

www.kingspantek.co.uk

Section through typical separating wall assemblies incorporating trussed rafter roof.

TEK 172

KIL-W12B-TEK-172

Date:	
13/10/14	
Drawn by: H.E.	Scale: 1:10

W — 12B

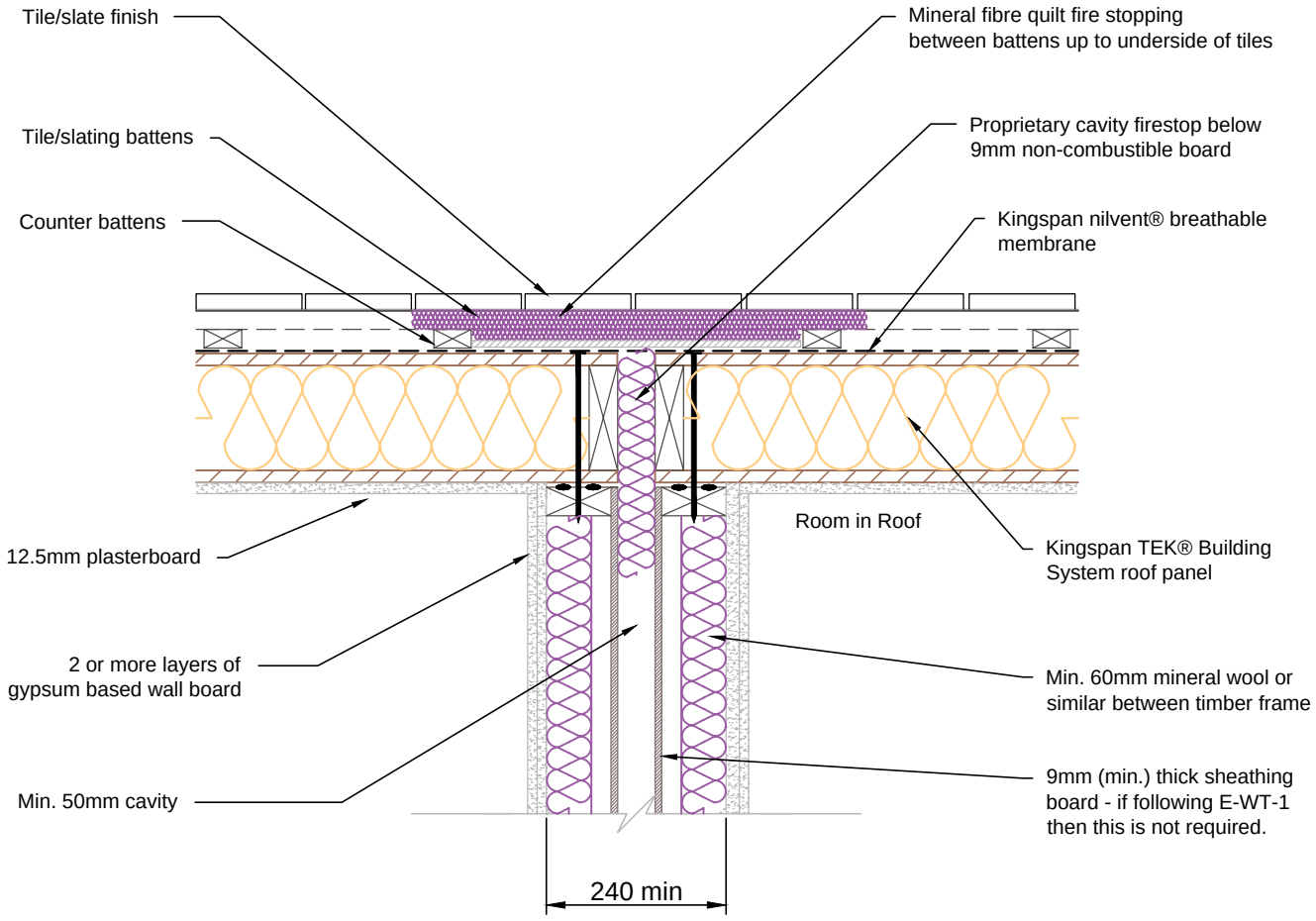

Kingspan TEK® Building System

Kingspan Insulation Limited
Pembridge, Leominster,
Herefordshire, HR6 9LA.
Tel: +44 (0)1544 388 601
Fax: +44 (0)1544 388 888
E-mail: info@kingspantek.co.uk

Kingspan Insulation Limited
Bree Ind. Estate, Castleblaney,
Co. Monaghan, Republic of Ireland
Tel: +353(0)42 979 5000
Fax: +353(0)42 975 4299
E-mail: info@kingspantek.ie

www.kingspantek.co.uk

Section through typical separating partial fill timber frame wall (E-WT-2) with TEK Roof

TEK 172

KIL-W12C-TEK-172

Date:	
03/11/14	
Drawn by: H.E.	Scale: 1:10

W — 12C

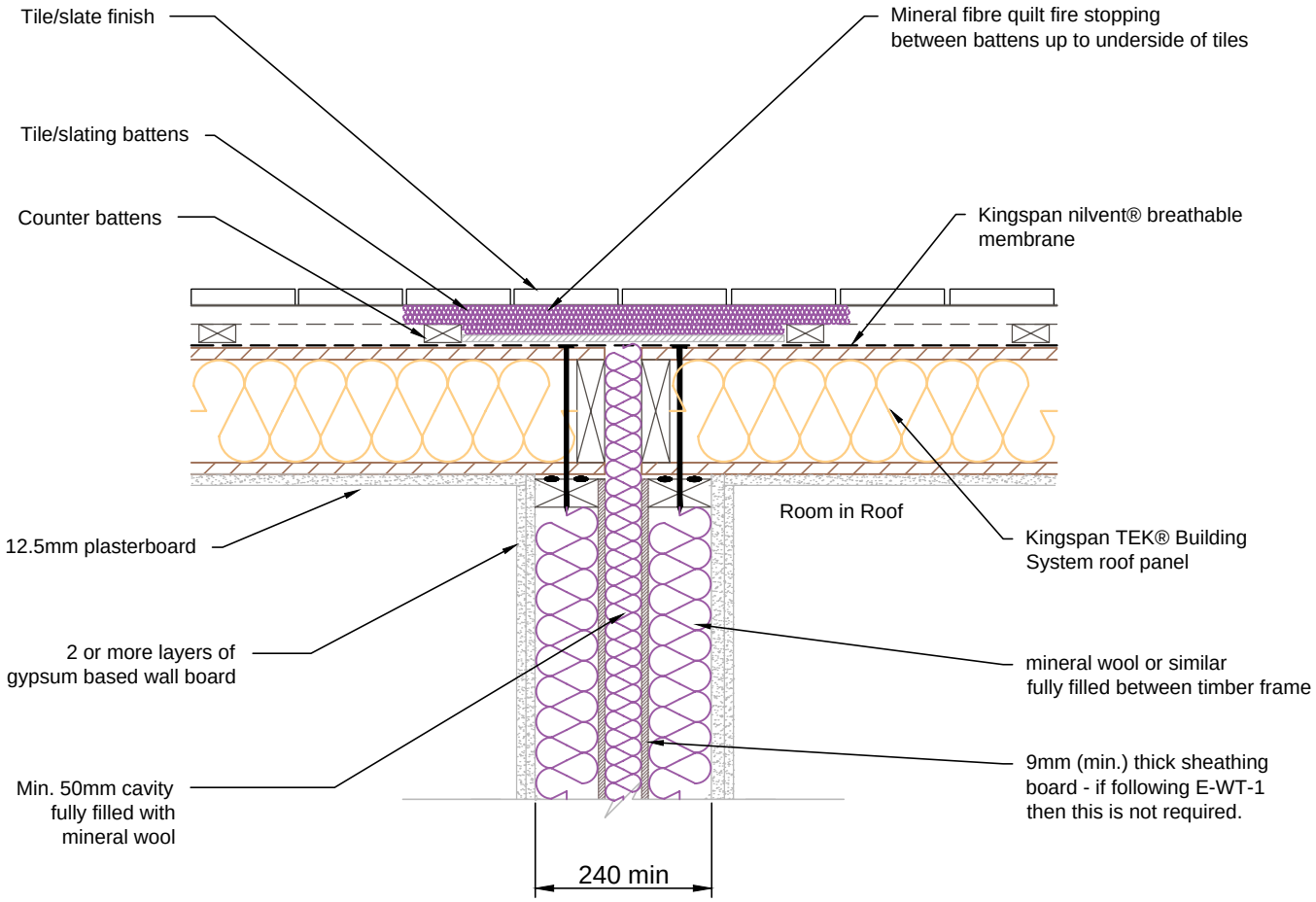

Kingspan TEK Building System

Kingspan Insulation Limited
Pembridge, Leominster,
Herefordshire, HR6 9LA.
Tel: +44 (0)1544 388 601
Fax: +44 (0)1544 388 888
E-mail: info@kingspantek.co.uk

Kingspan Insulation Limited
Bree Ind. Estate, Castleblaney,
Co. Monaghan, Republic of Ireland
Tel: +353(0)42 979 5000
Fax: +353(0)42 975 4299
E-mail: info@kingspantek.ie

www.kingspantek.co.uk

Section through typical separating full fill timber frame wall (E-WT-2) with TEK Roof

TEK 172

KIL-W12D-TEK-172

Date:	
03/11/14	
Drawn by: H.E.	Scale: 1:10

W — 12D

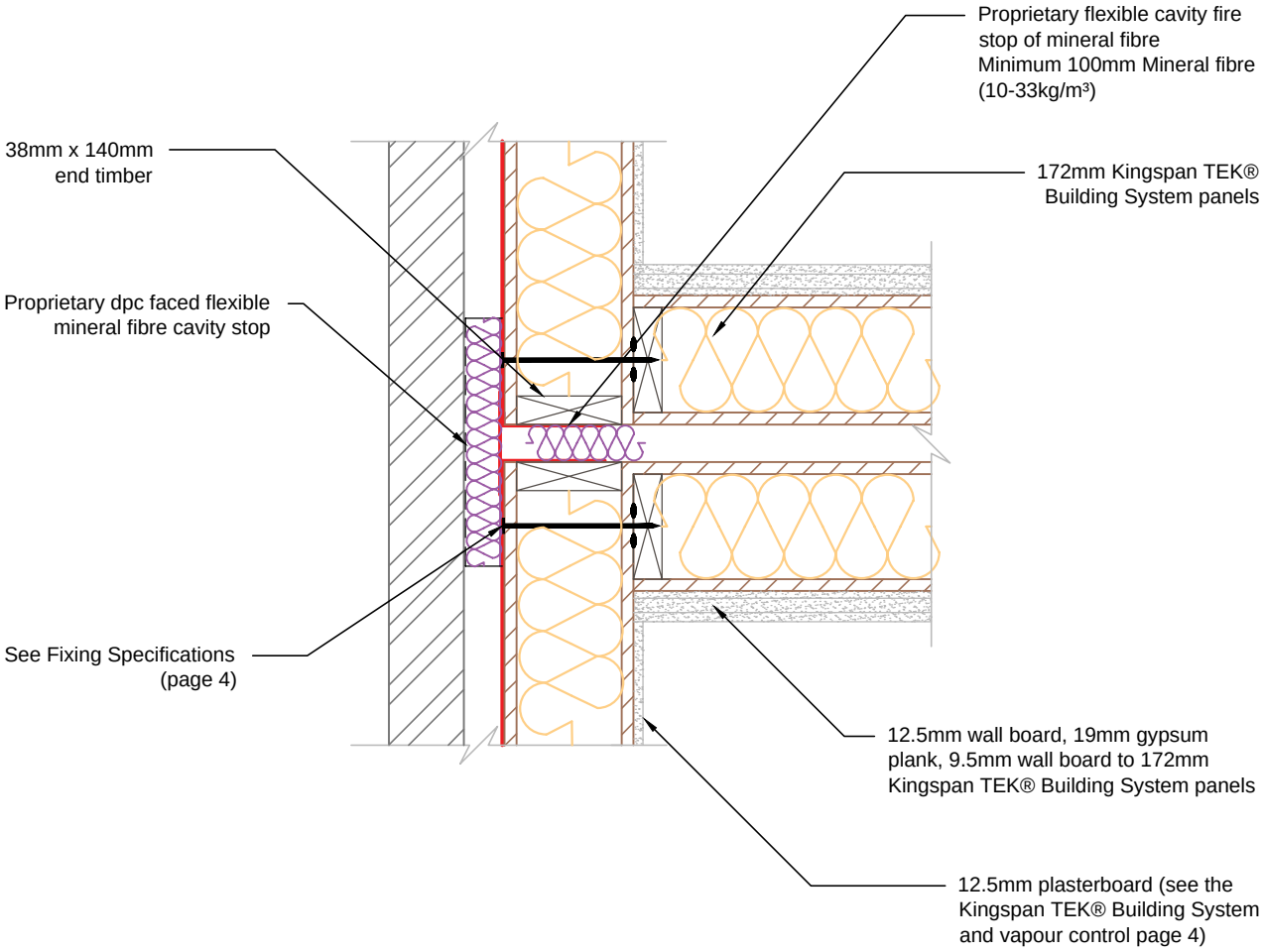

Kingspan TEK® Building System

Kingspan Insulation Limited
Pembridge, Leominster,
Herefordshire, HR6 9LA.
Tel: +44 (0)1544 388 601
Fax: +44 (0)1544 388 888
E-mail: info@kingspantek.co.uk

Kingspan Insulation Limited
Bree Ind. Estate, Castleblaney,
Co. Monaghan, Republic of Ireland
Tel: +353(0)42 979 5000
Fax: +353(0)42 975 4299
E-mail: info@kingspantek.ie

www.kingspantek.co.uk

Plan showing separating wall detail with brickwork external leaf incorporating flanking detail

TEK 172

KIL-W13-TEK-172

Date:	
13/10/14	
Drawn by: H.E.	Scale: 1:10

W 13

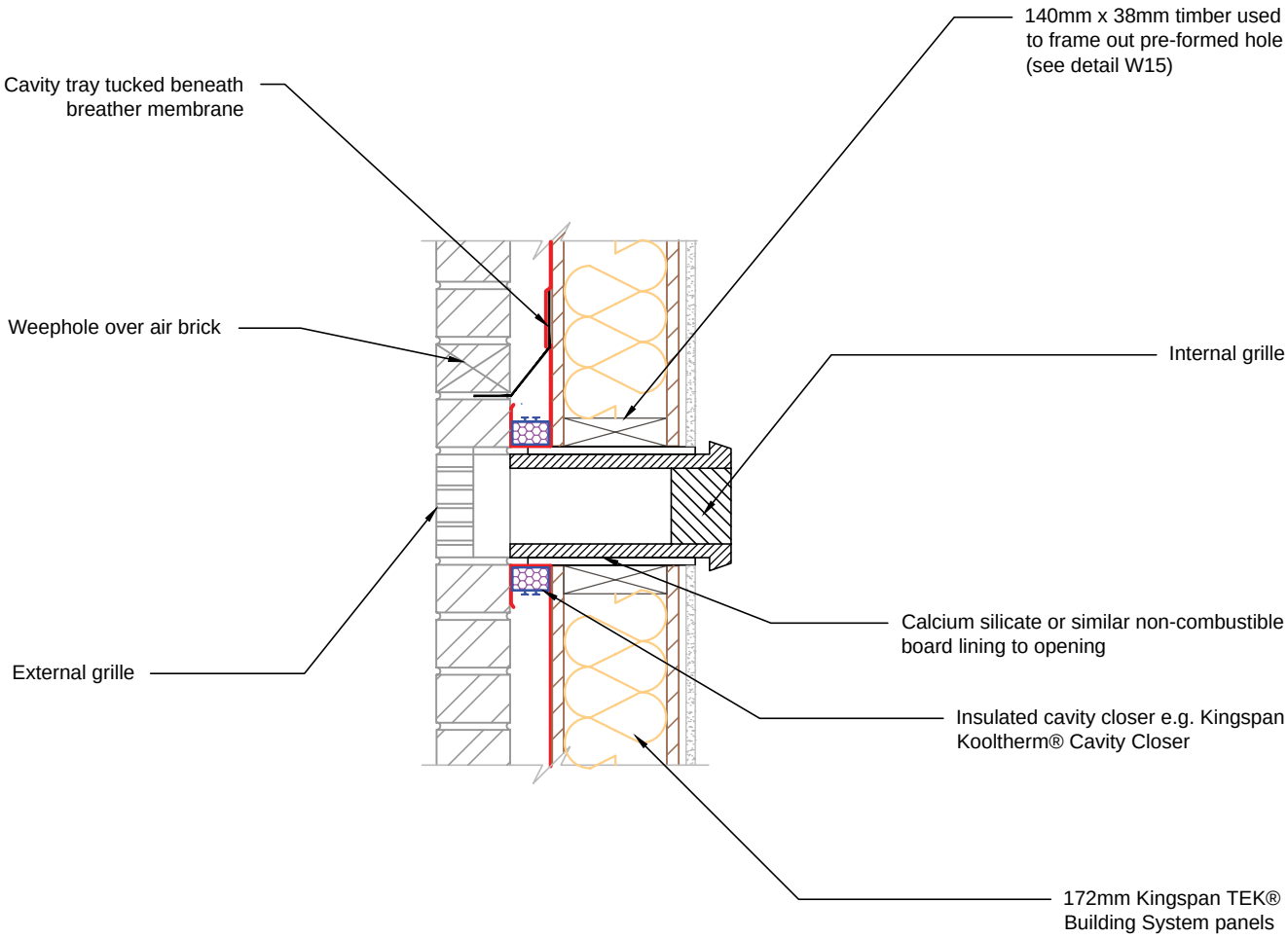

Kingspan TEK® Building System

Kingspan Insulation Limited
Pembridge, Leominster,
Herefordshire, HR6 9LA.
Tel: +44 (0)1544 388 601
Fax: +44 (0)1544 388 888
E-mail: info@kingspantek.co.uk

Kingspan Insulation Limited
Bree Ind. Estate, Castleblaney,
Co. Monaghan, Republic of Ireland
Tel: +353(0)42 979 5000
Fax: +353(0)42 975 4299
E-mail: info@kingspantek.ie

www.kingspantek.co.uk

Sectional elevation of ventilation inlet/outlet e.g. for MVHR system.

TEK 172

KIL-W14-TEK-172

Date: 13/10/14

Drawn by: H.E.

Scale: 1:10

W 14

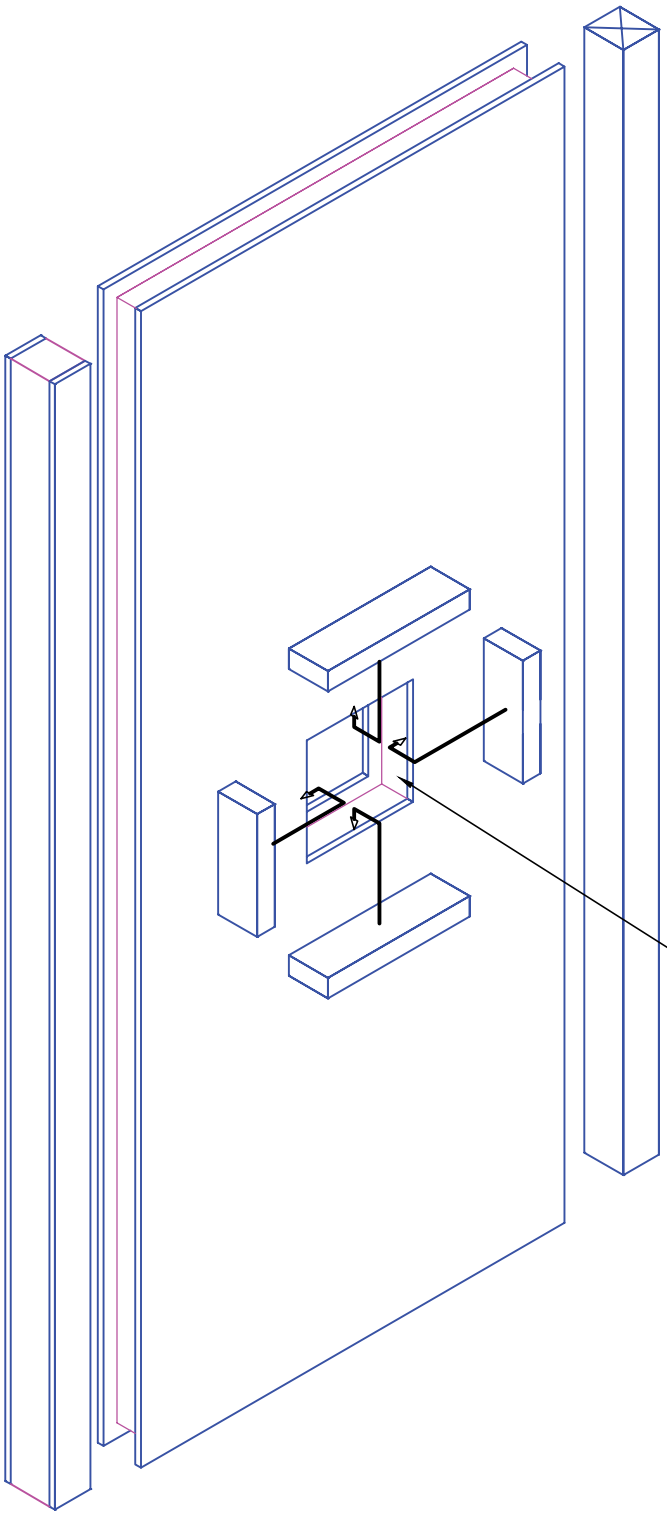

Note:

When an appliance is not suitable for direct mounting on a wall panel it should be separated from the wall structure by a 75mm air gap or by 25mm of non-combustible material.
The latter is usually achieved by non-combustible board to the plasterboard lining.

Wall mounted boilers should be fixed to the wall panel as per boiler manufacturer's instructions using fully threaded screws.
A pre-formed opening is to be framed out using 50 x 110mm timber scabs nailed @ 50mm min. cts. to receive flue leaving a minimum 25mm gap all round.
When twin walled flue is used the minimum distance is measured from the outer face of the inner flue.

Wall openings cut on site must be agreed with Kingspan Insulation prior to cutting. Generally opening should be cut central to wall panels & minimum 500mm from top of panel.

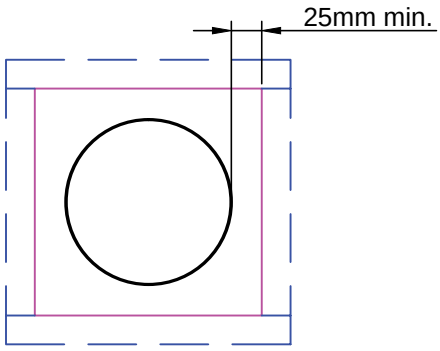

Front elevation - 1:10

Kingspan TEK Building System

Kingspan Insulation Limited
Pembridge, Leominster,
Herefordshire, HR6 9LA.
Tel: +44 (0)1544 388 601
Fax: +44 (0)1544 388 888
E-mail: info@kingspantek.co.uk

Kingspan Insulation Limited
Bree Ind. Estate, Castleblaney,
Co. Monaghan, Republic of Ireland
Tel: +353(0)42 979 5000
Fax: +353(0)42 975 4299
E-mail: info@kingspantek.ie

www.kingspantek.co.uk

Wall hung boiler installation

TEK 172

KIL-W15-TEK-172

Date: 13/10/14

Drawn by: H.E.

Scale: NTS

W 15

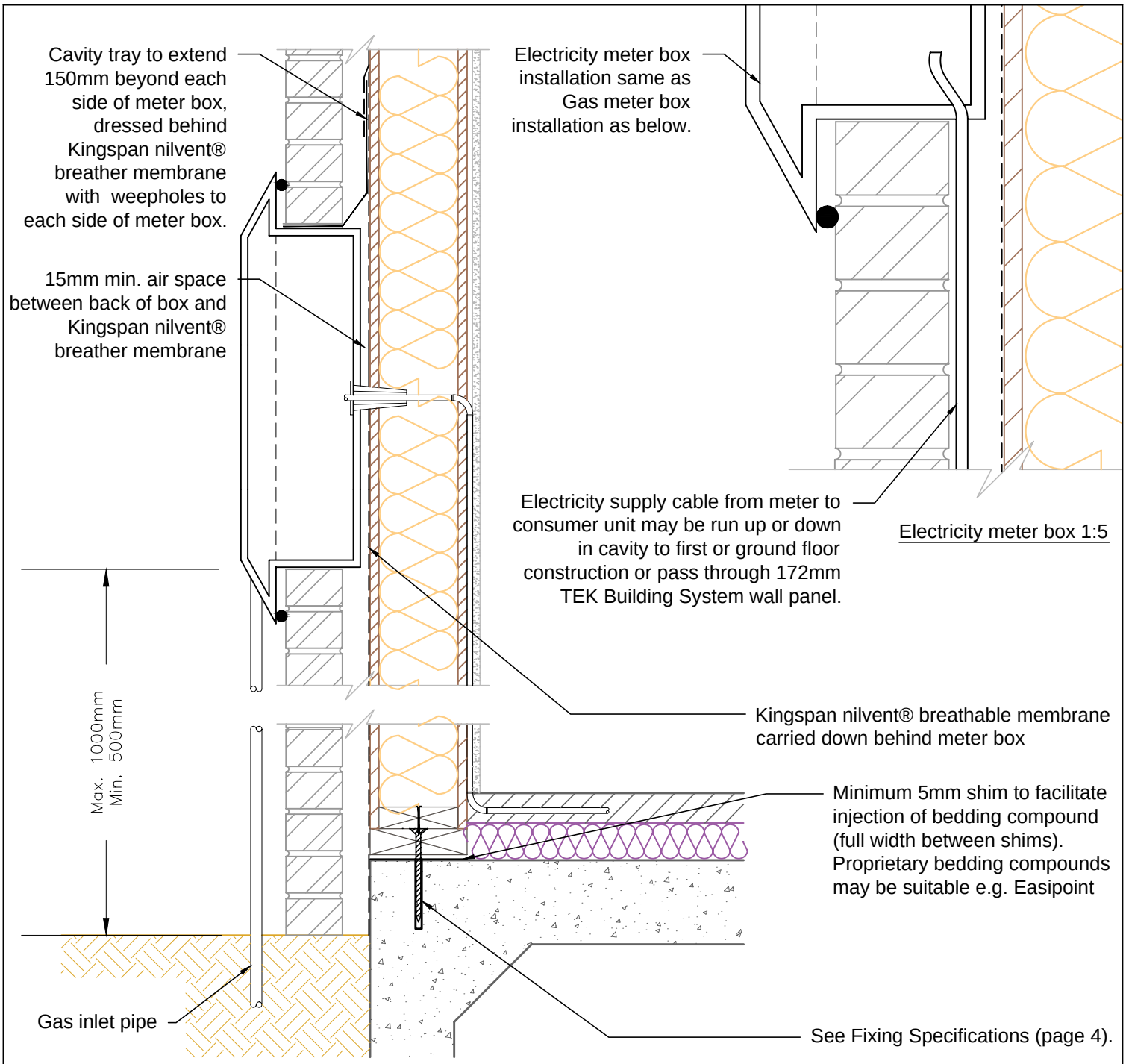

Notes:

1. For further information regarding soleplate/combination soleplate and bottom plate fixings and requirement for additional panel restraint see Fixing Specifications (page 4)

Kingspan TEK Building System

Kingspan Insulation Limited
Pembridge, Leominster,
Herefordshire, HR6 9LA.
Tel: +44 (0)1544 388 601
Fax: +44 (0)1544 388 888
E-mail: info@kingspantek.co.uk

Kingspan Insulation Limited
Bree Ind. Estate, Castleblaney,
Co. Monaghan, Republic of Ireland
Tel: +353(0)42 979 5000
Fax: +353(0)42 975 4299
E-mail: info@kingspantek.ie

www.kingspantek.co.uk

Gas + electricity meter box installation

TEK 172

KIL-W16-TEK-172

Date:	
13/10/14	
Drawn by: H.E.	Scale: 1:10

W 16

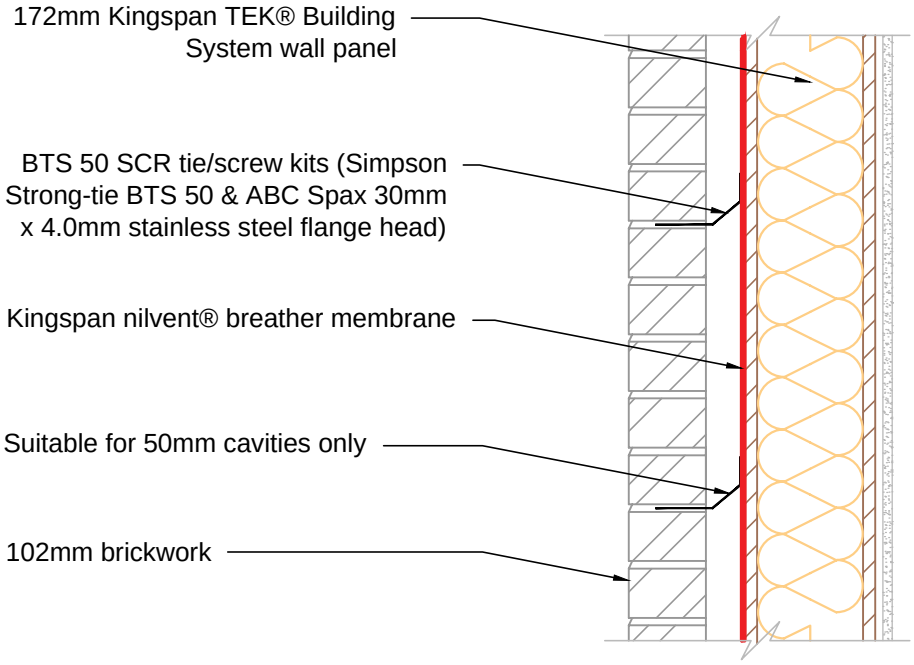

Preferred Fixing of External brick cladding Simpson Strong Tie - BTS 50 SCR tie/screw kits

BTS50

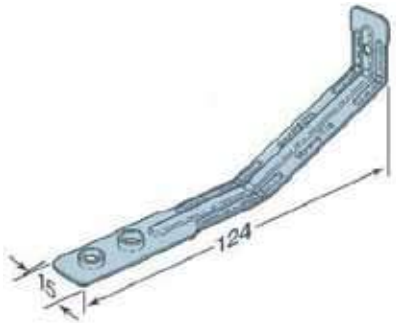

ABC Spax flange head pozi-drive screw



Density of ties (wind speed less than or equal to 52m/sec) - 4.4 ties per m² (spacing - 600 x 375mm)

Density of ties (wind speed greater than 52m/sec) - 7.0 ties per m² (spacing 600 x 225mm)

Kingspan TEK® Building System

Kingspan Insulation Limited
Pembridge, Leominster,
Herefordshire, HR6 9LA.
Tel: +44 (0)1544 388 601
Fax: +44 (0)1544 388 888
E-mail: info@kingspantek.co.uk

Kingspan Insulation Limited
Bree Ind. Estate, Castleblaney,
Co. Monaghan, Republic of Ireland
Tel: +353(0)42 979 5000
Fax: +353(0)42 975 4299
E-mail: info@kingspantek.ie

www.kingspantek.co.uk

External brick tie details for buildings not exceeding 4-storeys high

TEK 172

KIL-W17-TEK-172

Date:	
14/10/14	
Drawn by: H.E.	Scale: 1:10

W 17

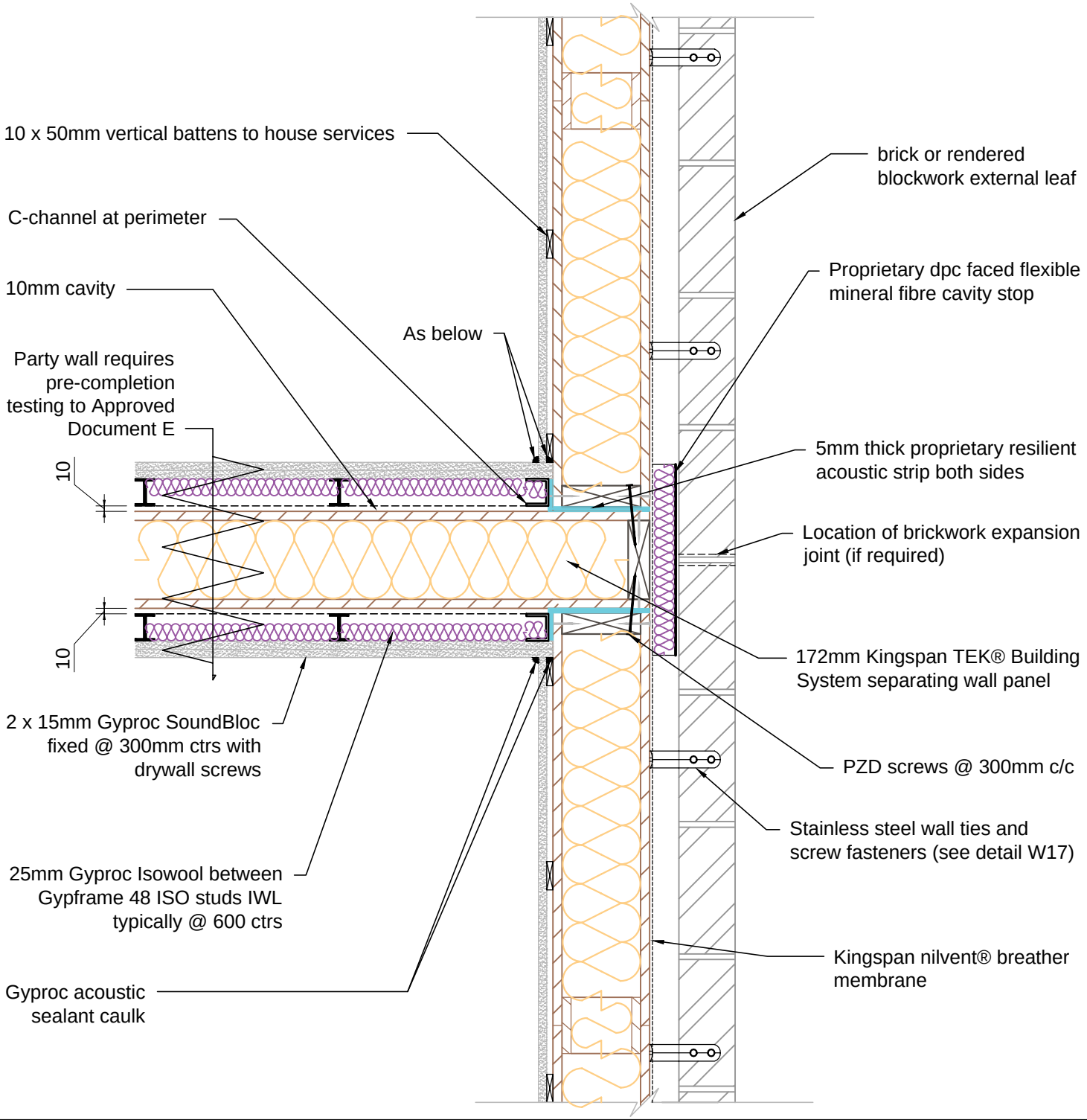

Notes:

1. All joints/gaps to be sealed with tape or Gyproc Acoustic sealant caulk

Kingspan TEK® Building System

Kingspan Insulation Limited
Pembridge, Leominster,
Herefordshire, HR6 9LA.
Tel: +44 (0)1544 388 601
Fax: +44 (0)1544 388 888
E-mail: info@kingspantek.co.uk

Kingspan Insulation Limited
Bree Ind. Estate, Castleblaney,
Co. Monaghan, Republic of Ireland
Tel: +353(0)42 979 5000
Fax: +353(0)42 975 4299
E-mail: info@kingspantek.ie

www.kingspantek.co.uk

Kingspan TEK® Building System single separating wall junction with external wall.

TEK 172

KIL-W18A-TEK-172

Date:	
14/10/14	
Drawn by: H.E.	Scale: 1:10

W — 18A

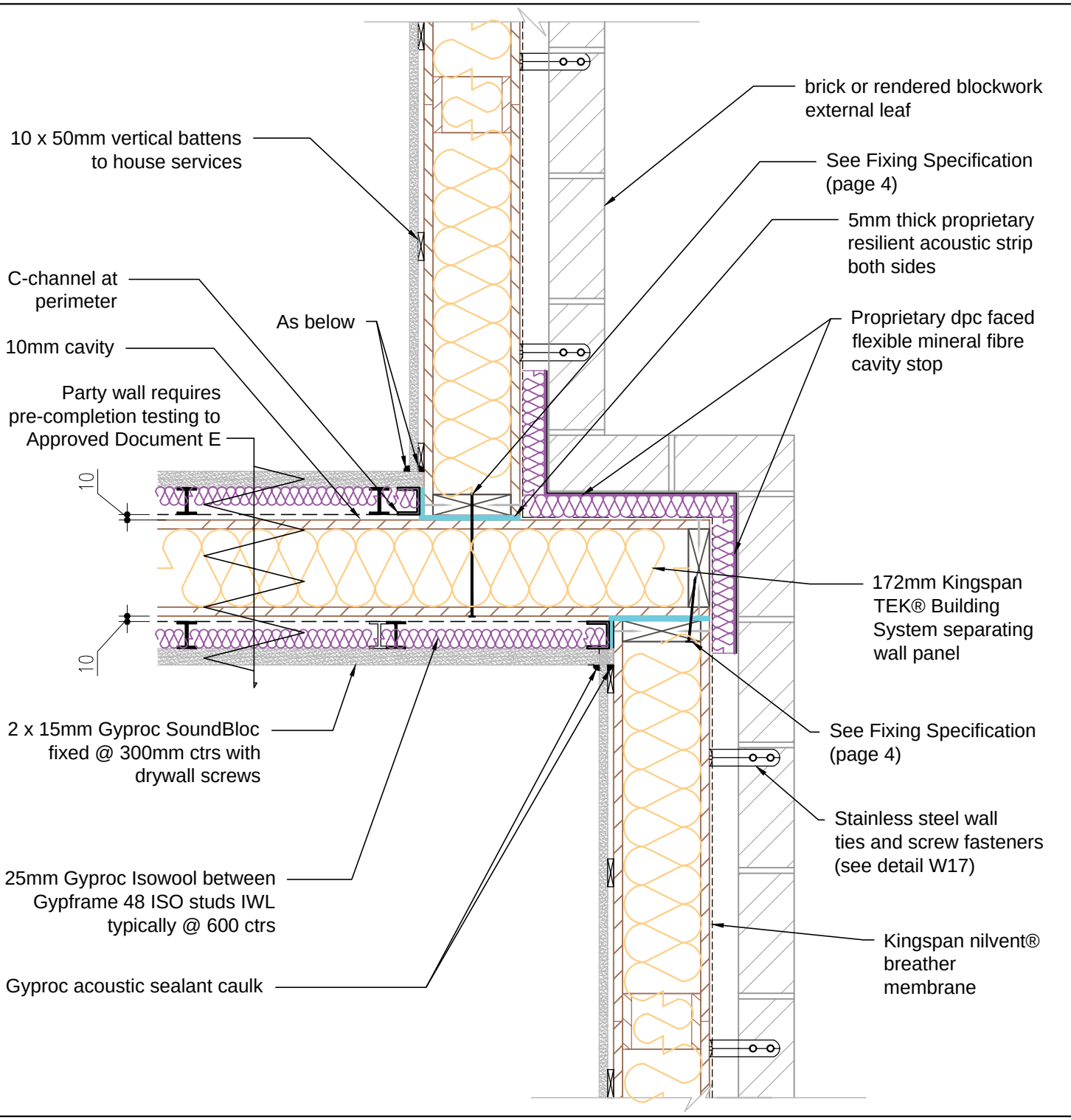

Notes:

1. All joints/gaps to be sealed with tape or Gyproc Acoustic sealant caulk

Kingspan TEK® Building System

Kingspan Insulation Limited
Pembridge, Leominster,
Herefordshire, HR6 9LA.
Tel: +44 (0)1544 388 601
Fax: +44 (0)1544 388 888
E-mail: info@kingspantek.co.uk

Kingspan Insulation Limited
Bree Ind. Estate, Castleblaney,
Co. Monaghan, Republic of Ireland
Tel: +353(0)42 979 5000
Fax: +353(0)42 975 4299
E-mail: info@kingspantek.ie

www.kingspantek.co.uk

Kingspan TEK® Building System single separating wall junction - stepped external wall detail

TEK 172

KIL-W18B-TEK-172

Date:	
14/10/14	
Drawn by: H.E.	Scale: 1:10

W — 18B

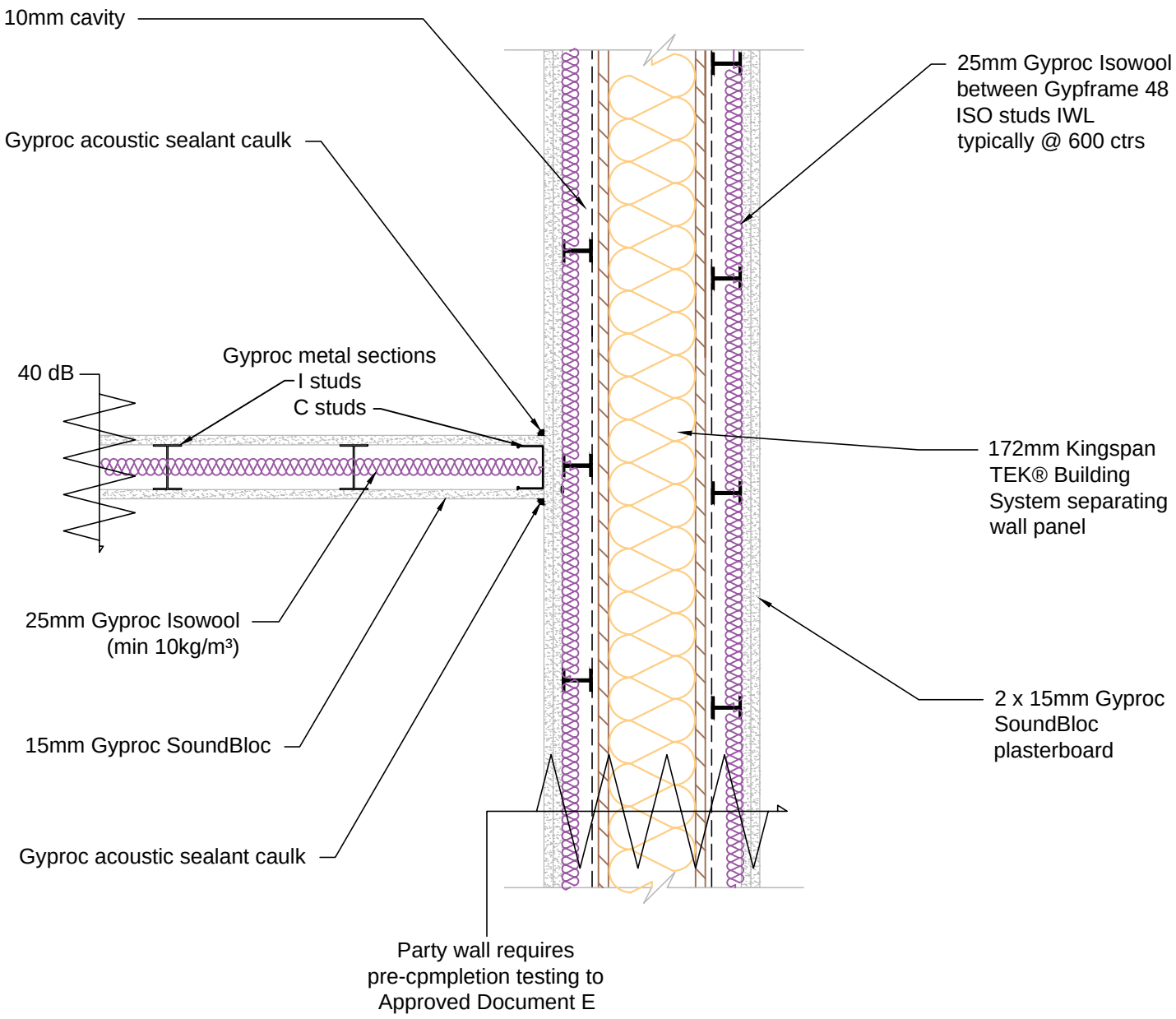

Notes:

1. All joints/gaps to be sealed with tape or Gyproc Acoustic sealant caulk

Kingspan TEK® Building System

Kingspan Insulation Limited
Pembridge, Leominster,
Herefordshire, HR6 9LA.
Tel: +44 (0)1544 388 601
Fax: +44 (0)1544 388 888
E-mail: info@kingspantek.co.uk

Kingspan Insulation Limited
Bree Ind. Estate, Castleblaney,
Co. Monaghan, Republic of Ireland
Tel: +353(0)42 979 5000
Fax: +353(0)42 975 4299
E-mail: info@kingspantek.ie

www.kingspantek.co.uk

Lightweight frame internal wall connection

onto Kingspan TEK® Building System single separating wall

TEK 172

KIL-W18C-TEK-172

Date:	
14/10/14	
Drawn by: H.E.	Scale: 1:10

W — 18C

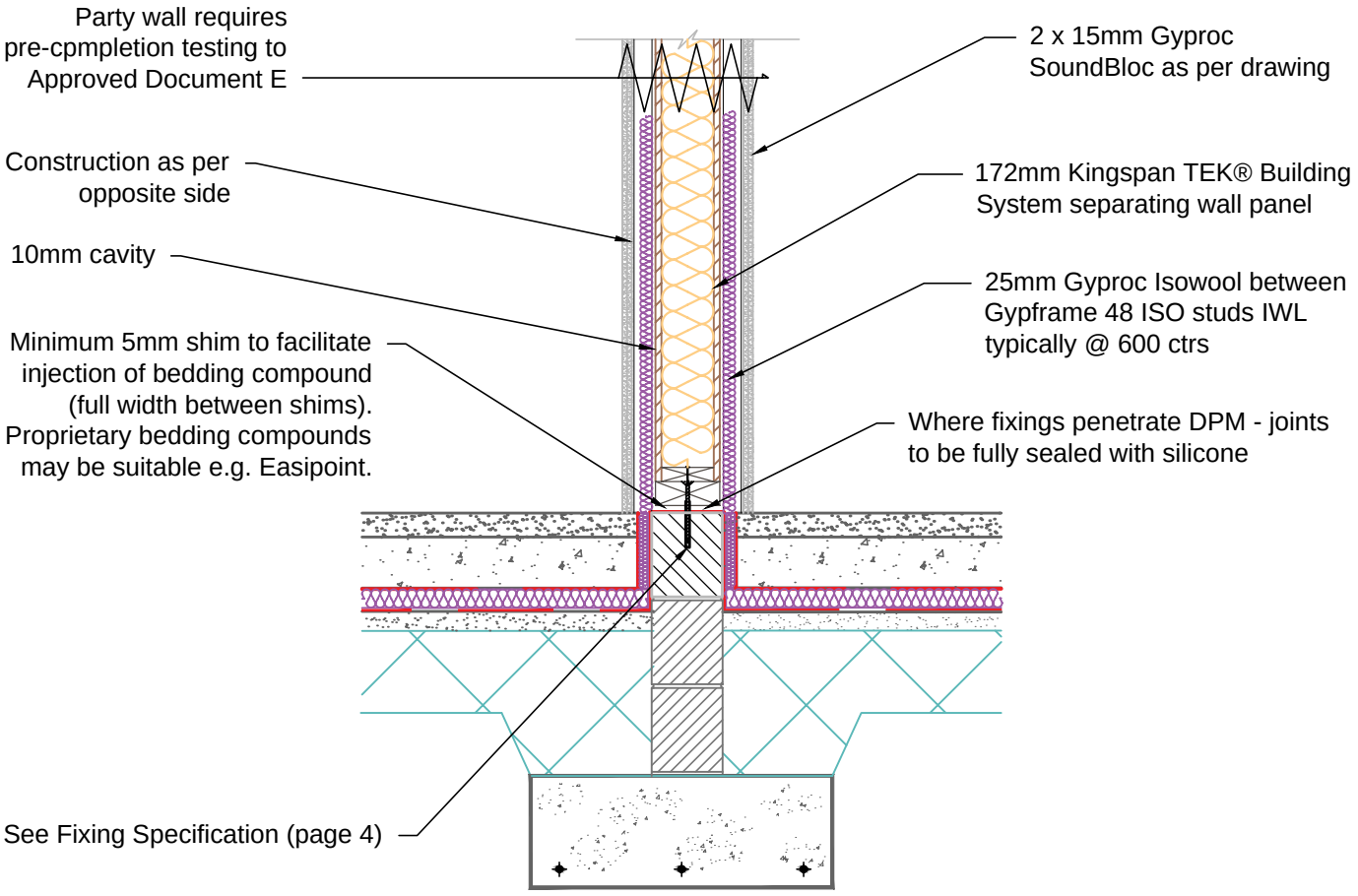

Notes:

1. For further information regarding soleplate / combination soleplate and bottom plate fixings and the requirement for additional panel restraint see Fixing Specifications (page 4).
2. All joints/gaps to be sealed with tape or Gyproc Acoustic sealant caulk

Kingspan TEK Building System

Kingspan Insulation Limited
Pembridge, Leominster,
Herefordshire, HR6 9LA.
Tel: +44 (0)1544 388 601
Fax: +44 (0)1544 388 888
E-mail: info@kingspantek.co.uk

Kingspan Insulation Limited
Bree Ind. Estate, Castleblaney,
Co. Monaghan, Republic of Ireland
Tel: +353(0)42 979 5000
Fax: +353(0)42 975 4299
E-mail: info@kingspantek.ie

www.kingspantek.co.uk

Kingspan TEK Building System single separating wall junction - ground floor slab detail

TEK 172

KIL-W18D-TEK-172

Date:	
14/10/14	
Drawn by: H.E.	Scale: 1:20

W — 18D

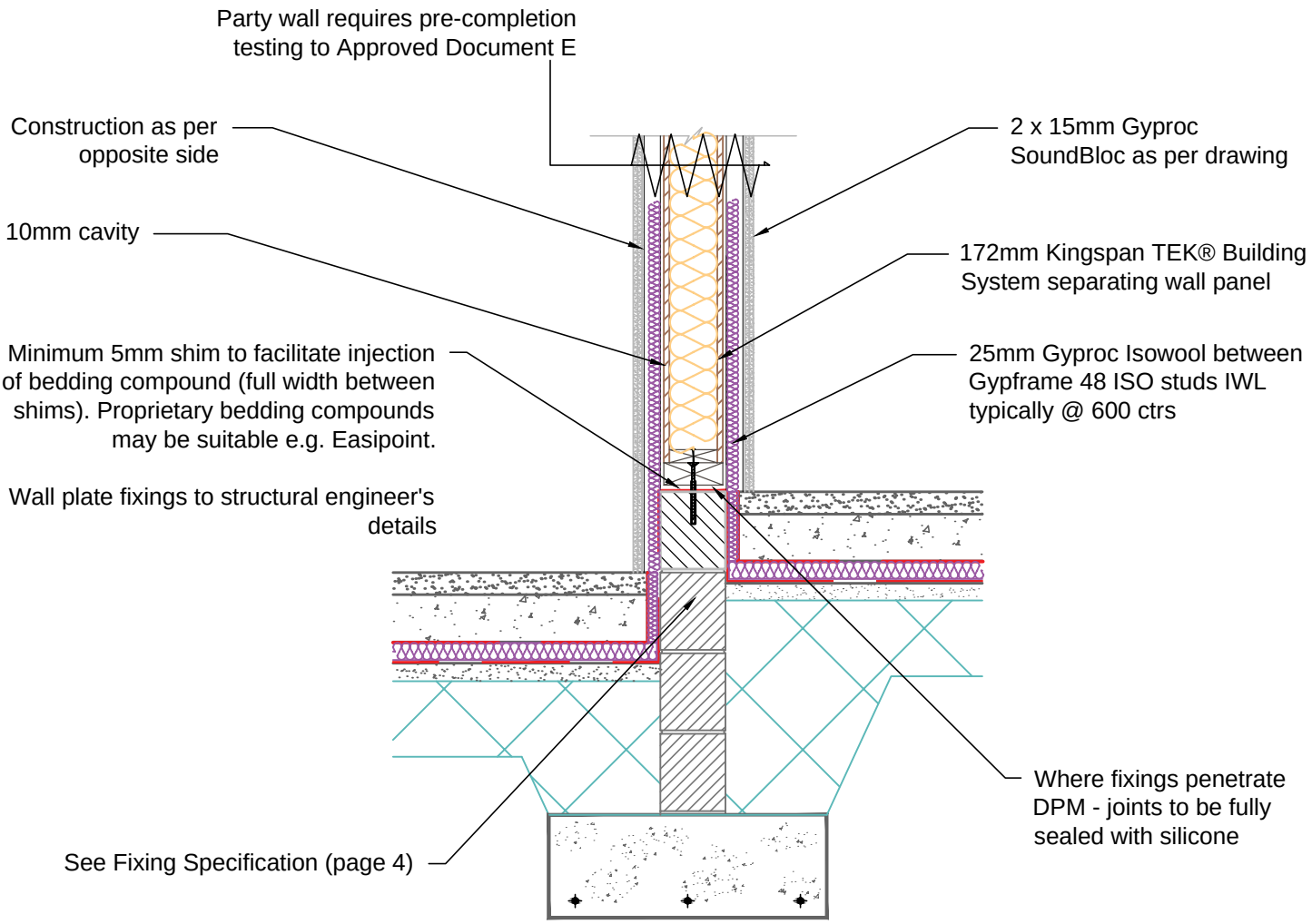

Notes:

1. For further information regarding soleplate / combination soleplate and bottom plate fixings and the requirement for additional panel restraint see Fixing Specifications (page 4).
2. All joints/gaps to be sealed with tape or Gyproc Acoustic sealant caulk

Kingspan TEK Building System

Kingspan Insulation Limited
Pembridge, Leominster,
Herefordshire, HR6 9LA.
Tel: +44 (0)1544 388 601
Fax: +44 (0)1544 388 888
E-mail: info@kingspantek.co.uk

Kingspan Insulation Limited
Bree Ind. Estate, Castleblaney,
Co. Monaghan, Republic of Ireland
Tel: +353(0)42 979 5000
Fax: +353(0)42 975 4299
E-mail: info@kingspantek.ie

www.kingspantek.co.uk

Kingspan TEK Building System single separating wall junction - stepped ground floor slab detail

TEK 172

KIL-W18E-TEK-172

Date:	
14/10/14	
Drawn by: H.E.	Scale: 1:20

W — 18E

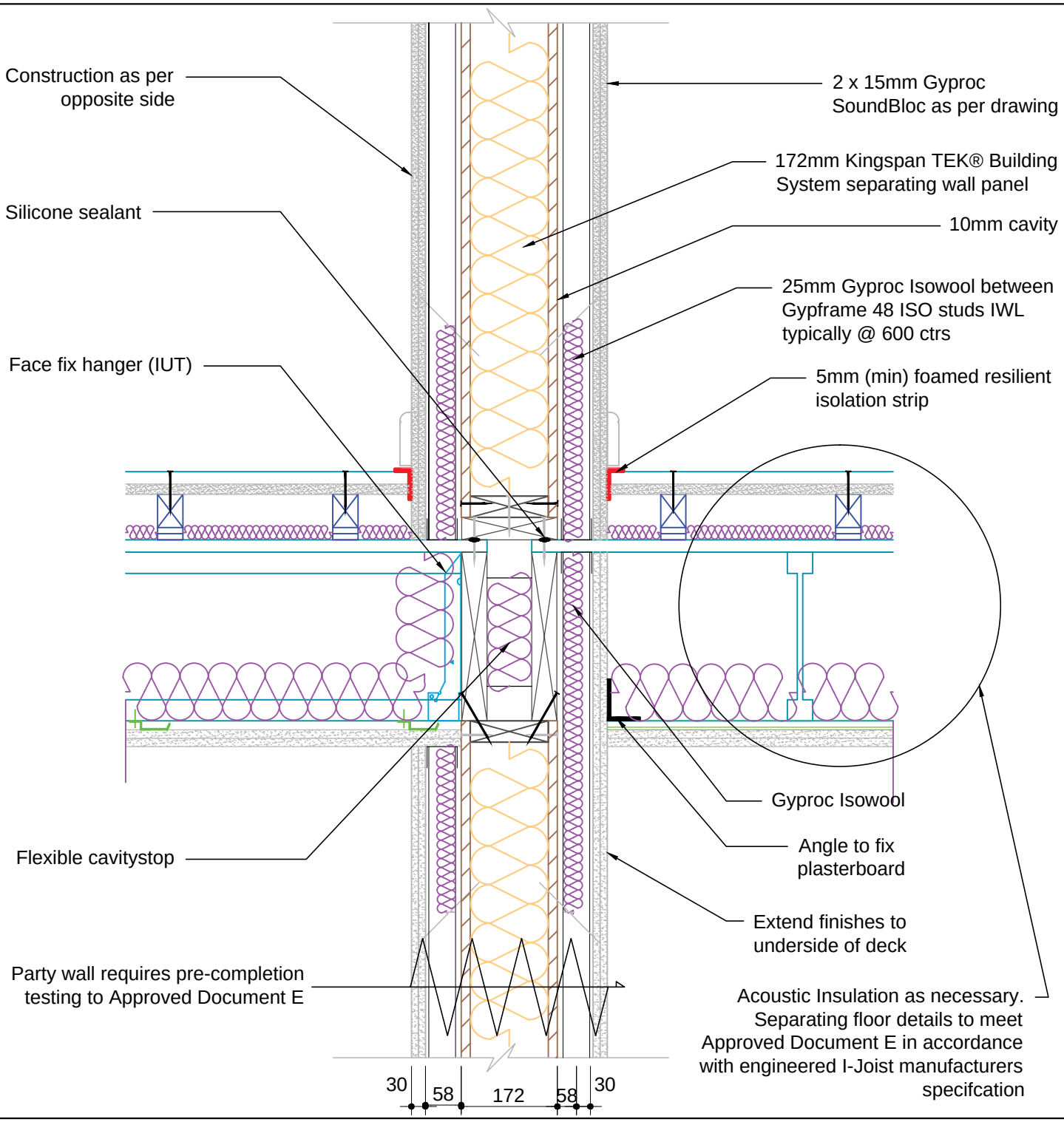

Notes:

1. All joints/gaps to be sealed with tape or Gyproc Acoustic sealant caulk

Kingspan TEK Building System

Kingspan Insulation Limited
Pembridge, Leominster,
Herefordshire, HR6 9LA.
Tel: +44 (0)1544 388 601
Fax: +44 (0)1544 388 888
E-mail: info@kingspantek.co.uk

Kingspan Insulation Limited
Bree Ind. Estate, Castleblaney,
Co. Monaghan, Republic of Ireland
Tel: +353(0)42 979 5000
Fax: +353(0)42 975 4299
E-mail: info@kingspantek.ie

www.kingspantek.co.uk

Kingspan TEK Building System single separating wall junction - separating floor detail

TEK 172

KIL-W18F-TEK-172

Date:	
14/10/14	
Drawn by: H.E.	Scale: 1:10

W — 18F

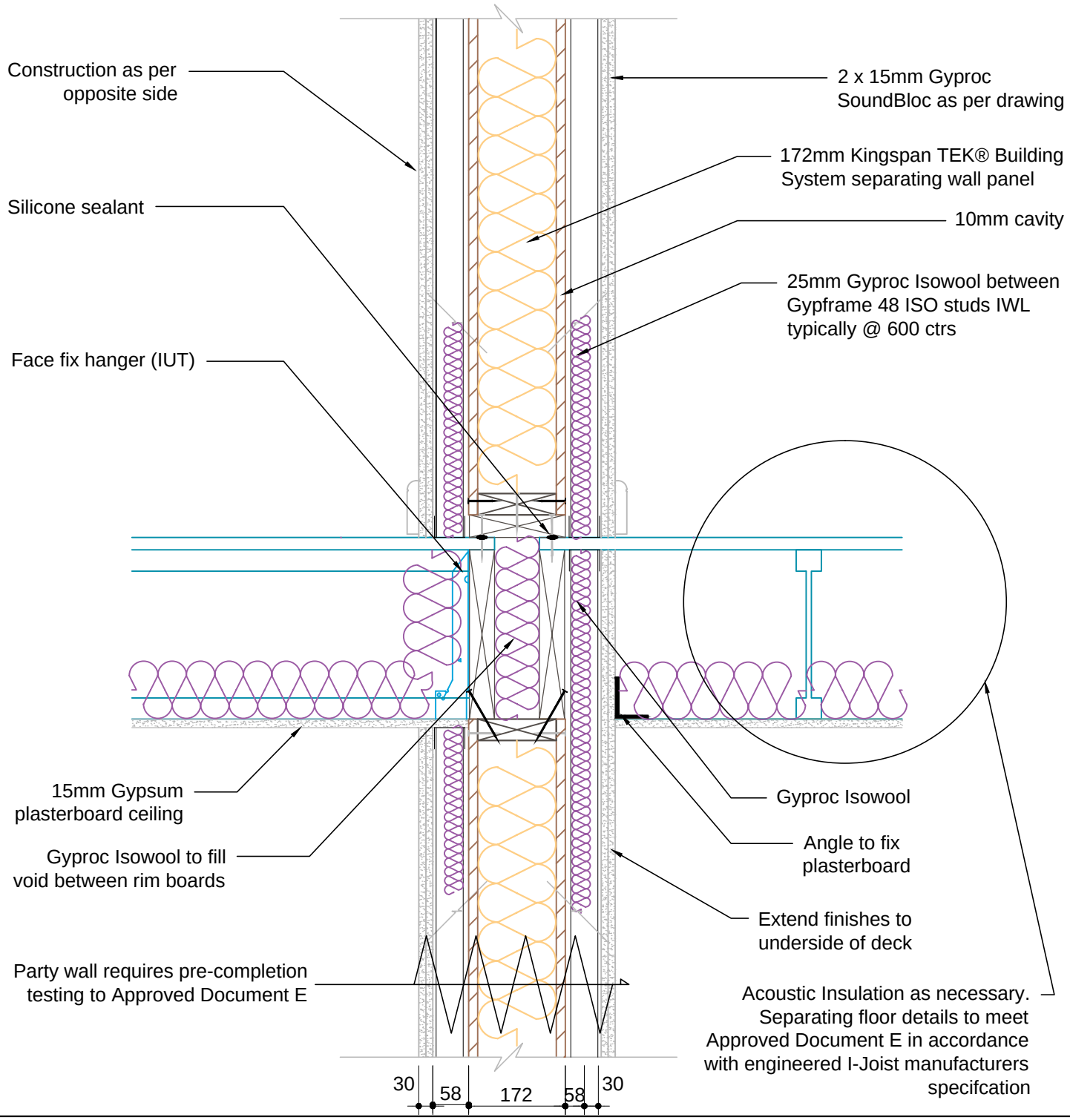

Notes:

1. All joints/gaps to be sealed with tape or Gyproc Acoustic sealant caulk

Kingspan TEK Building System

Kingspan Insulation Limited
Pembridge, Leominster,
Herefordshire, HR6 9LA.
Tel: +44 (0)1544 388 601
Fax: +44 (0)1544 388 888
E-mail: info@kingspantek.co.uk

Kingspan Insulation Limited
Bree Ind. Estate, Castleblaney,
Co. Monaghan, Republic of Ireland
Tel: +353(0)42 979 5000
Fax: +353(0)42 975 4299
E-mail: info@kingspantek.ie

www.kingspantek.co.uk

Kingspan TEK Building System single separating wall junction - internal floor junction

TEK 172

KIL-W18G-TEK-172

Date:	
16/10/14	
Drawn by: H.E.	Scale: 1:10

W — 18G

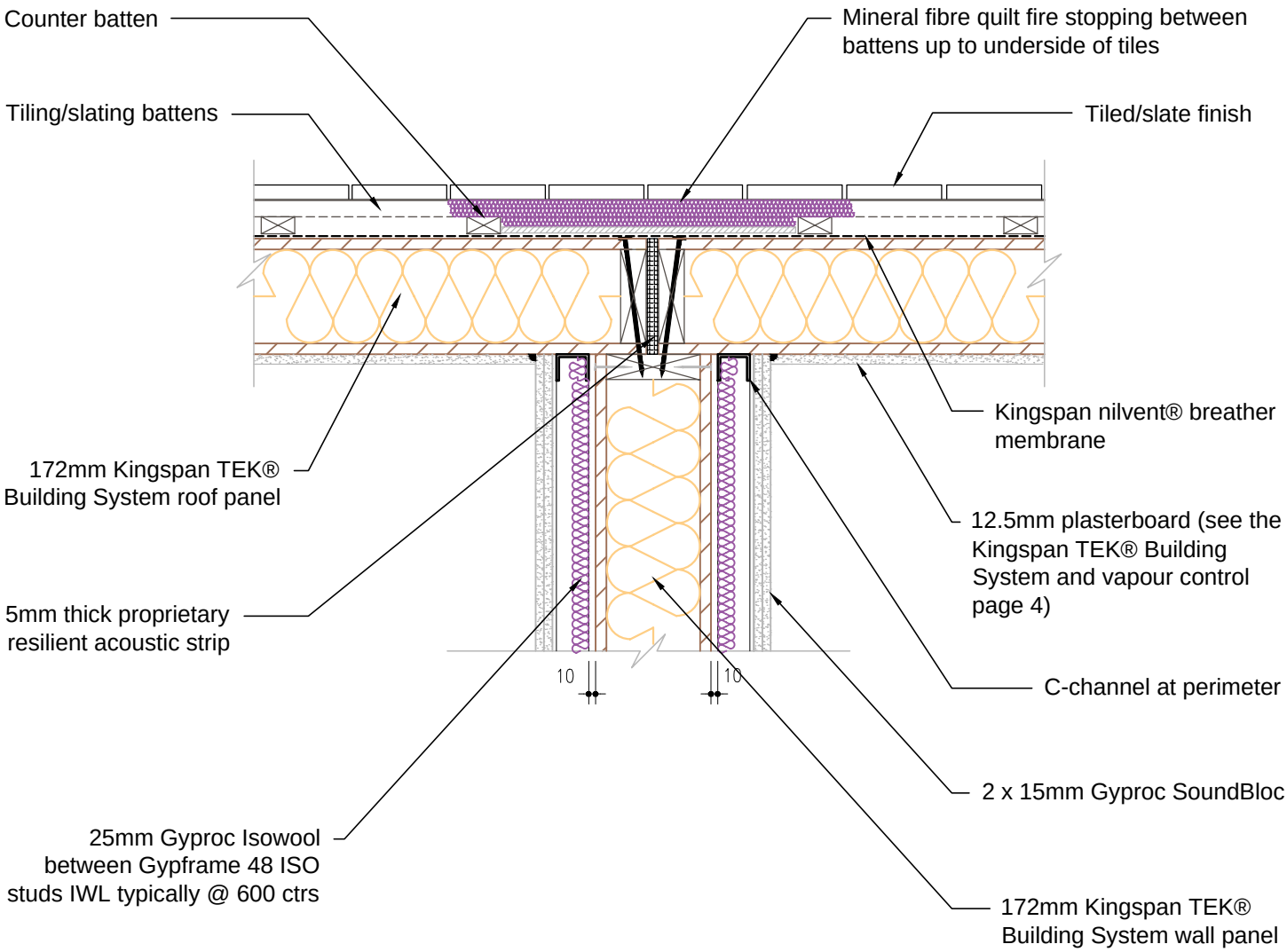

Notes:

1. All joints/gaps to be sealed with tape or Gyproc Acoustic sealant caulk

Kingspan TEK Building System

Kingspan Insulation Limited
Pembridge, Leominster,
Herefordshire, HR6 9LA.
Tel: +44 (0)1544 388 601
Fax: +44 (0)1544 388 888
E-mail: info@kingspantek.co.uk

Kingspan Insulation Limited
Bree Ind. Estate, Castleblaney,
Co. Monaghan, Republic of Ireland
Tel: +353(0)42 979 5000
Fax: +353(0)42 975 4299
E-mail: info@kingspantek.ie

www.kingspantek.co.uk

Kingspan TEK Building System single separating wall junction - room in roof detail

TEK 172

KIL-W18H-TEK-172

Date:	
16/10/14	
Drawn by: H.E.	Scale: 1:10

W — 18H

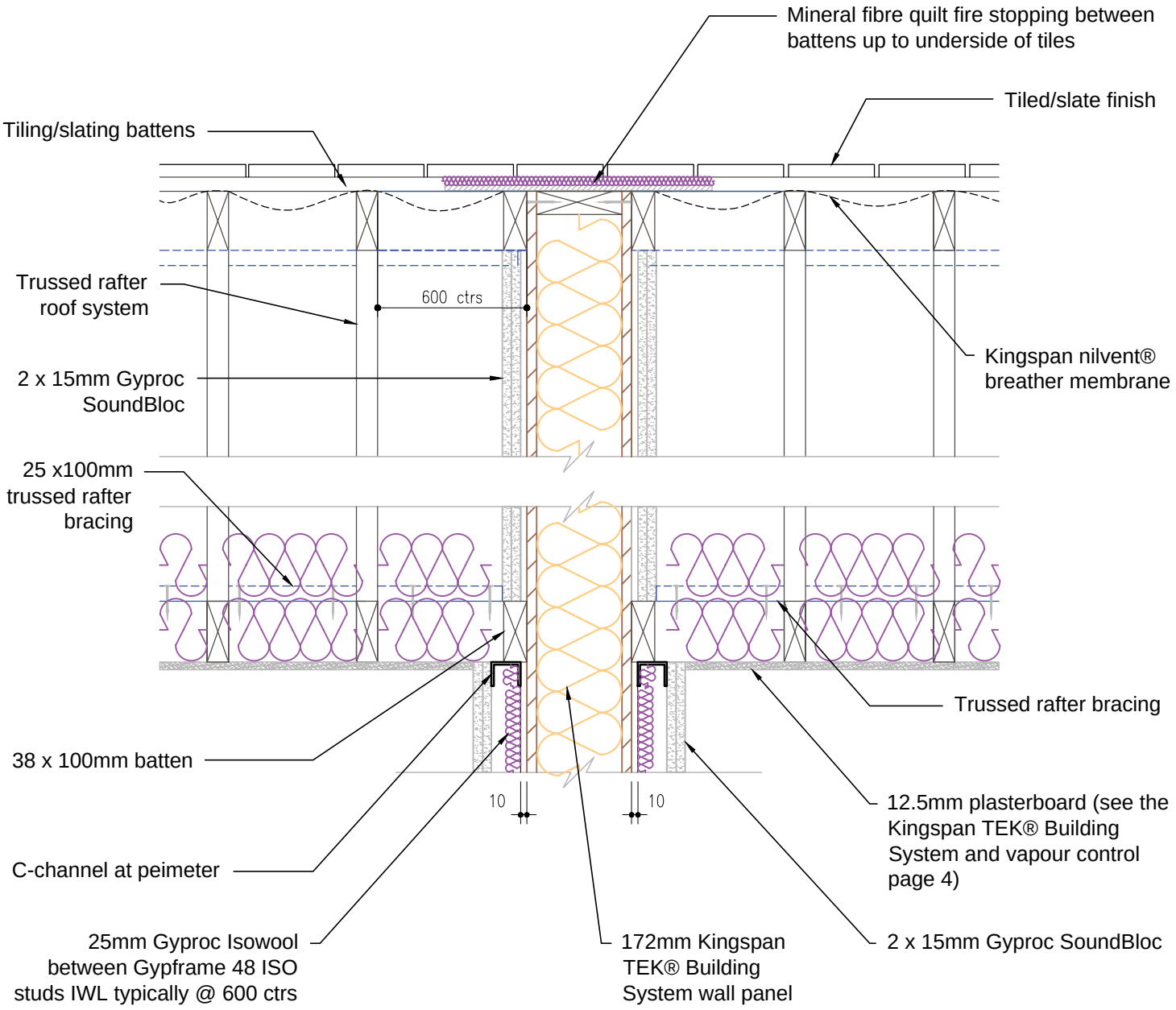

Notes:

1. All joints/gaps to be sealed with tape or Gyproc Acoustic sealant caulk

Kingspan TEK® Building System

Kingspan Insulation Limited
Pembridge, Leominster,
Herefordshire, HR6 9LA.
Tel: +44 (0)1544 388 601
Fax: +44 (0)1544 388 888
E-mail: info@kingspantek.co.uk

Kingspan Insulation Limited
Bree Ind. Estate, Castleblaney,
Co. Monaghan, Republic of Ireland
Tel: +353(0)42 979 5000
Fax: +353(0)42 975 4299
E-mail: info@kingspantek.ie

www.kingspantek.co.uk

Kingspan TEK Building System single separating wall junction - trussed rafter roof detail

TEK 172

KIL-W18J-TEK-172

Date:	
16/10/14	
Drawn by: H.E.	Scale: 1:10

W — 18J

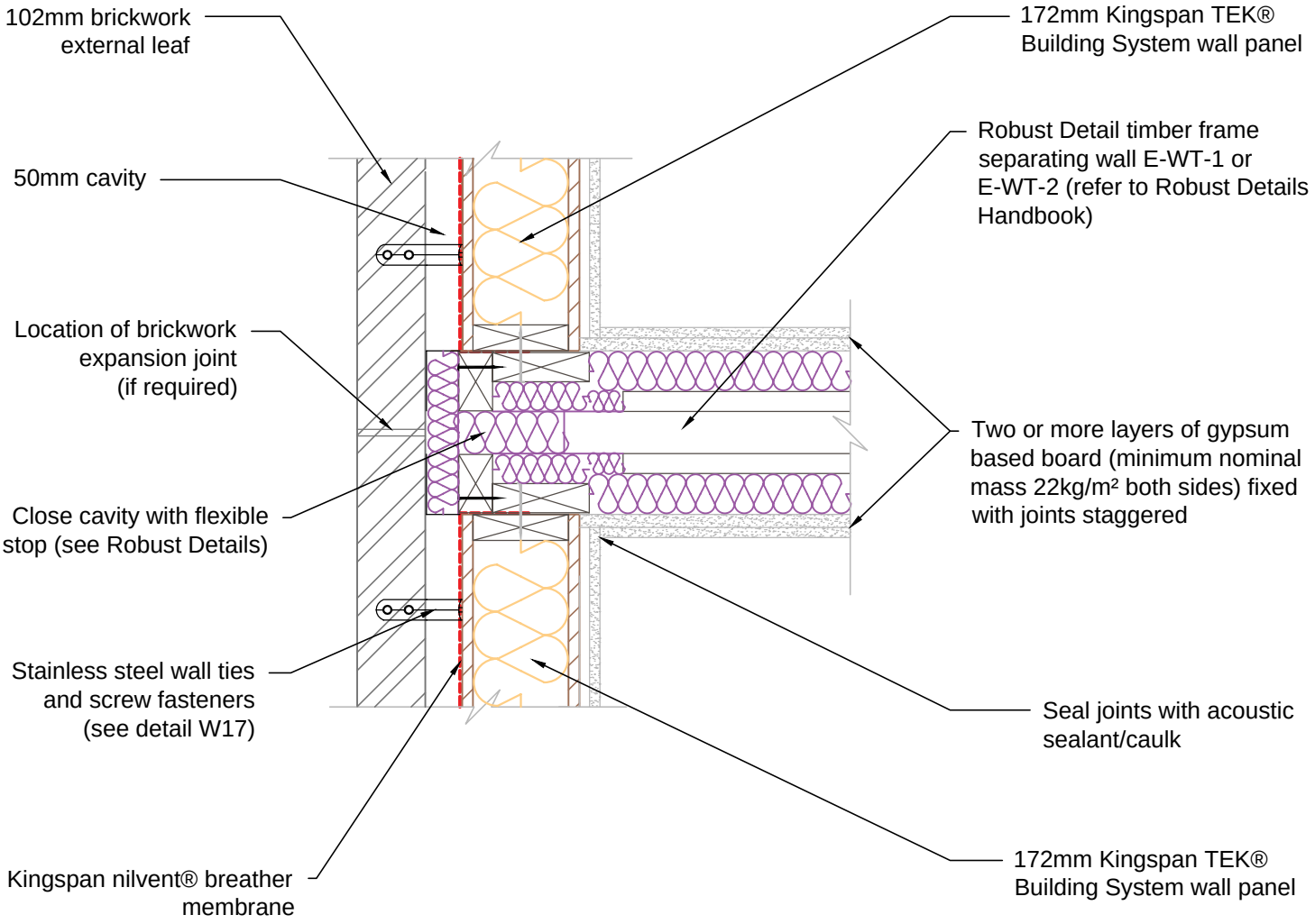

Notes:

1. All joints/gaps to be sealed with tape or Gyproc Acoustic sealant caulk

Kingspan TEK Building System

Kingspan Insulation Limited
Pembridge, Leominster,
Herefordshire, HR6 9LA.
Tel: +44 (0)1544 388 601
Fax: +44 (0)1544 388 888
E-mail: info@kingspantek.co.uk

Kingspan Insulation Limited
Bree Ind. Estate, Castleblaney,
Co. Monaghan, Republic of Ireland
Tel: +353(0)42 979 5000
Fax: +353(0)42 975 4299
E-mail: info@kingspantek.ie

www.kingspantek.co.uk

Kingspan TEK Building System external (flanking) wall junction with timber separating walls to Robust Details E-WT-1 and E-WT-2

TEK 172

KIL-W19A-TEK-172

Date:	
16/10/14	
Drawn by: H.E.	Scale: 1:10

W — 19A

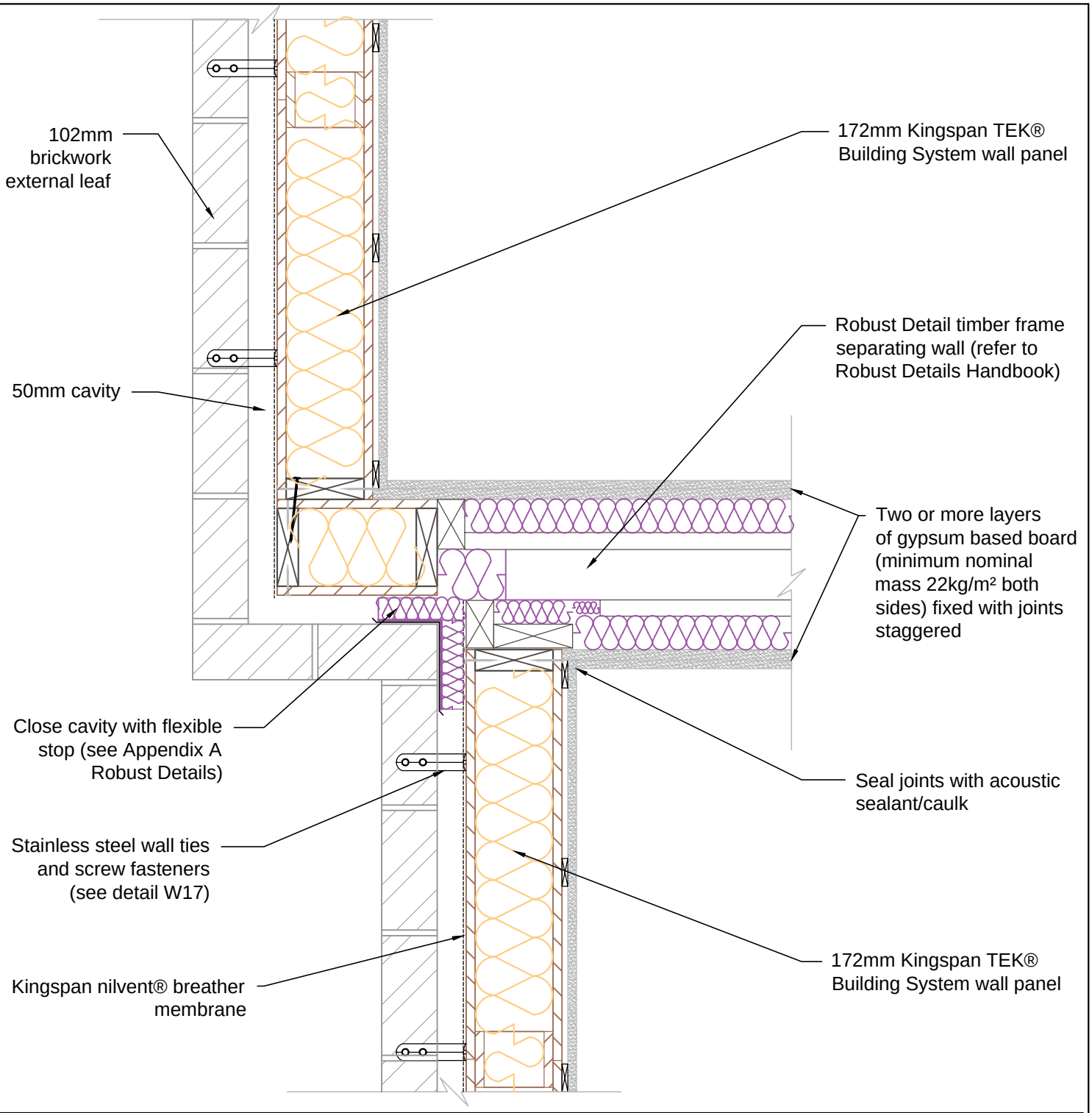

Notes:

1. All joints/gaps to be sealed with tape or Gyproc Acoustic sealant caulk

Kingspan TEK Building System

Kingspan Insulation Limited
Pembridge, Leominster,
Herefordshire, HR6 9LA.
Tel: +44 (0)1544 388 601
Fax: +44 (0)1544 388 888
E-mail: info@kingspantek.co.uk

Kingspan Insulation Limited
Bree Ind. Estate, Castleblaney,
Co. Monaghan, Republic of Ireland
Tel: +353(0)42 979 5000
Fax: +353(0)42 975 4299
E-mail: info@kingspantek.ie

www.kingspantek.co.uk

Kingspan TEK Building System staggered external (flanking) wall junction with timber separating walls to Robust Details E-WT-1 and E-WT-2

TEK 172

KIL-W19B-TEK-172

Date:	
16/10/14	
Drawn by: H.E.	Scale: 1:10

W — 19B

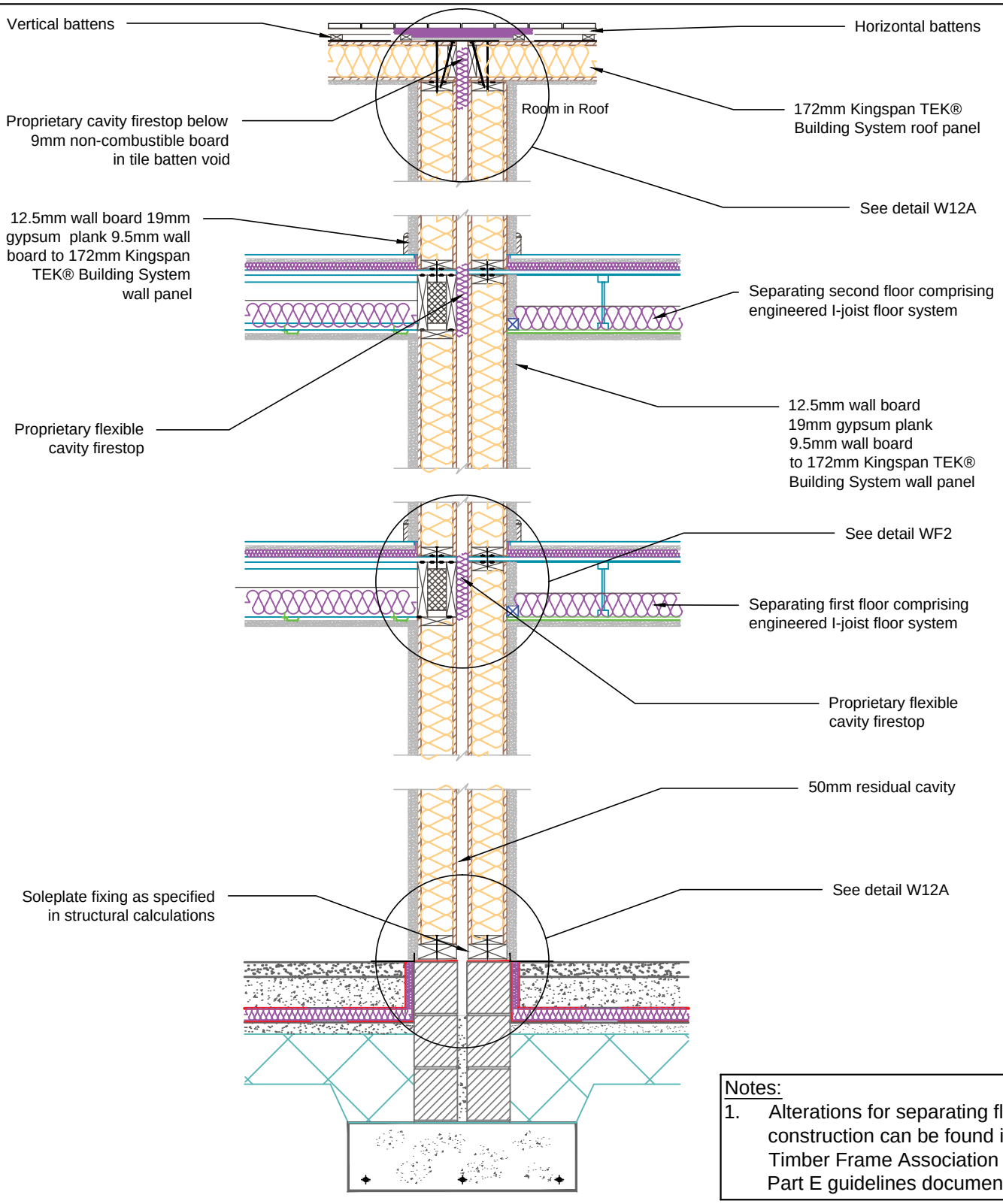

Notes:

1. Alterations for separating floor construction can be found in UK Timber Frame Association (UKTFA) Part E guidelines document

Kingspan TEK® Building System

Kingspan Insulation Limited
Pembridge, Leominster,
Herefordshire, HR6 9LA.
Tel: +44 (0)1544 388 601
Fax: +44 (0)1544 388 888
E-mail: info@kingspantek.co.uk

Kingspan Insulation Limited
Bree Ind. Estate, Castleblaney,
Co. Monaghan, Republic of Ireland
Tel: +353(0)42 979 5000
Fax: +353(0)42 975 4299
E-mail: info@kingspantek.ie

www.kingspantek.co.uk

Typical separating wall section incorporating room in roof

TEK 172

KIL-F1-TEK-172

Date:	
17/10/14	
Drawn by: H.E.	Scale: 1:25

F — 1

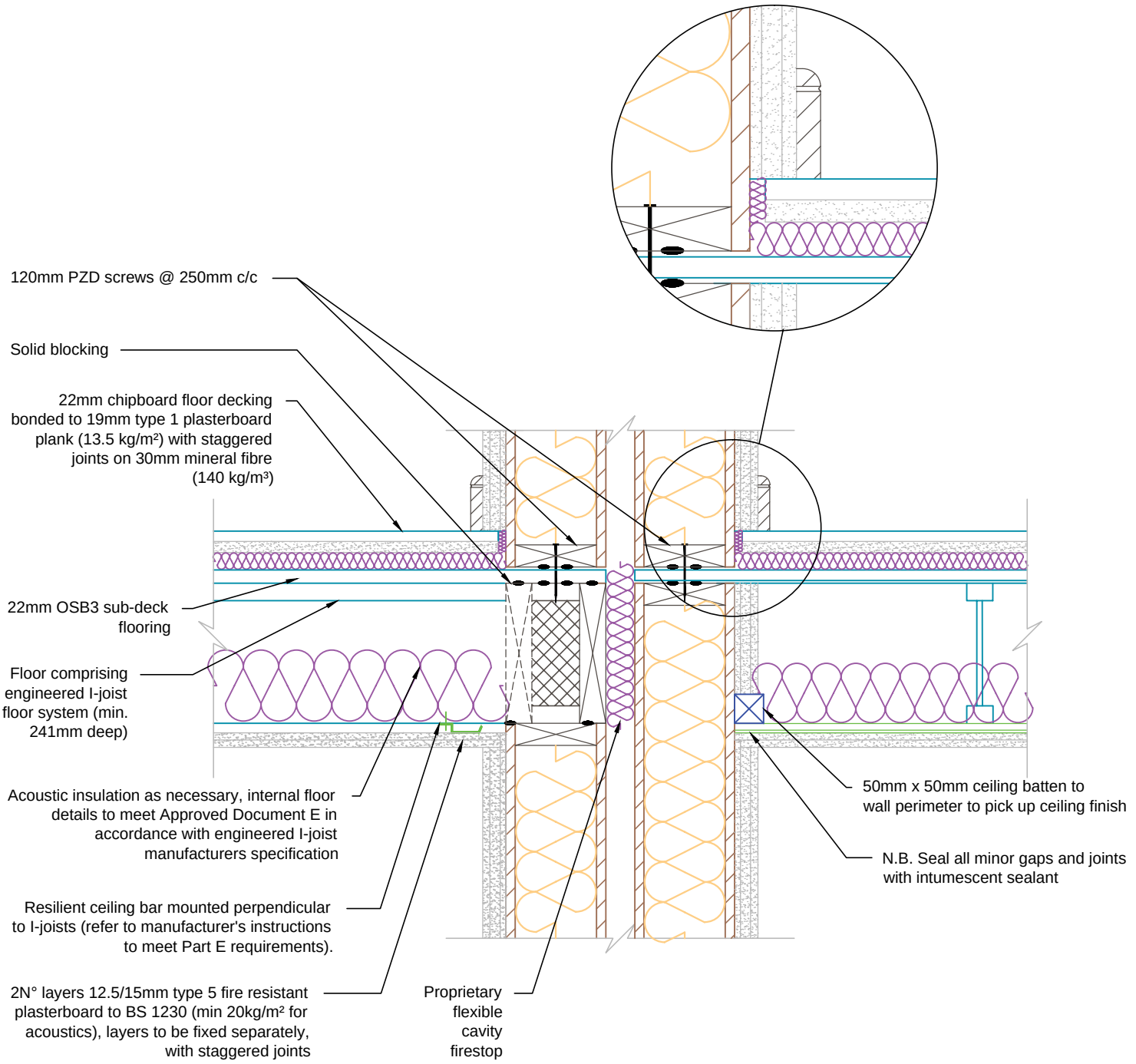

Notes:

1. Alterations for separating floor construction can be found in UK Timber Frame Association (UKTFA) Part E guidelines document

Kingspan TEK Building System

Kingspan Insulation Limited
Pembridge, Leominster,
Herefordshire, HR6 9LA.
Tel: +44 (0)1544 388 601
Fax: +44 (0)1544 388 888
E-mail: info@kingspantek.co.uk

Kingspan Insulation Limited
Bree Ind. Estate, Castleblaney,
Co. Monaghan, Republic of Ireland
Tel: +353(0)42 979 5000
Fax: +353(0)42 975 4299
E-mail: info@kingspantek.ie

www.kingspantek.co.uk

Typical separating wall & floor assemblies

TEK 172

KIL-F2-TEK-172

Date:	
20/10/14	
Drawn by: H.E.	Scale: 1:10

F — 2

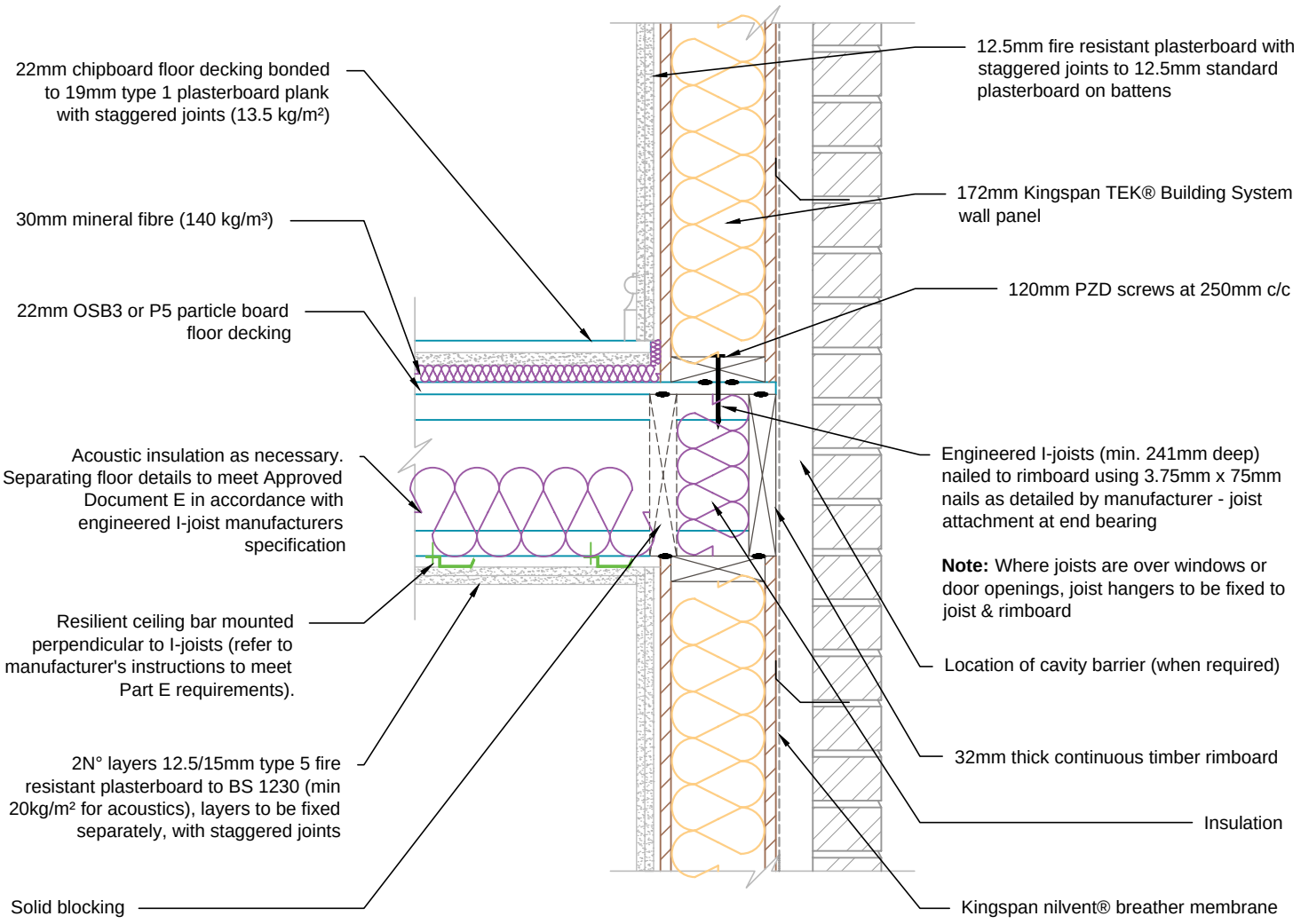

Kingspan TEK® Building System

Kingspan Insulation Limited
Pembridge, Leominster,
Herefordshire, HR6 9LA.
Tel: +44 (0)1544 388 601
Fax: +44 (0)1544 388 888
E-mail: info@kingspantek.co.uk

Kingspan Insulation Limited
Bree Ind. Estate, Castleblaney,
Co. Monaghan, Republic of Ireland
Tel: +353(0)42 979 5000
Fax: +353(0)42 975 4299
E-mail: info@kingspantek.ie

www.kingspantek.co.uk

Separating floor detail. Platform frame.

Non-robust detail pre-completion test (pct) required.

TEK 172

KIL-F3-TEK-172

Date:	
21/10/14	
Drawn by: H.E.	Scale: 1:10

F — 3

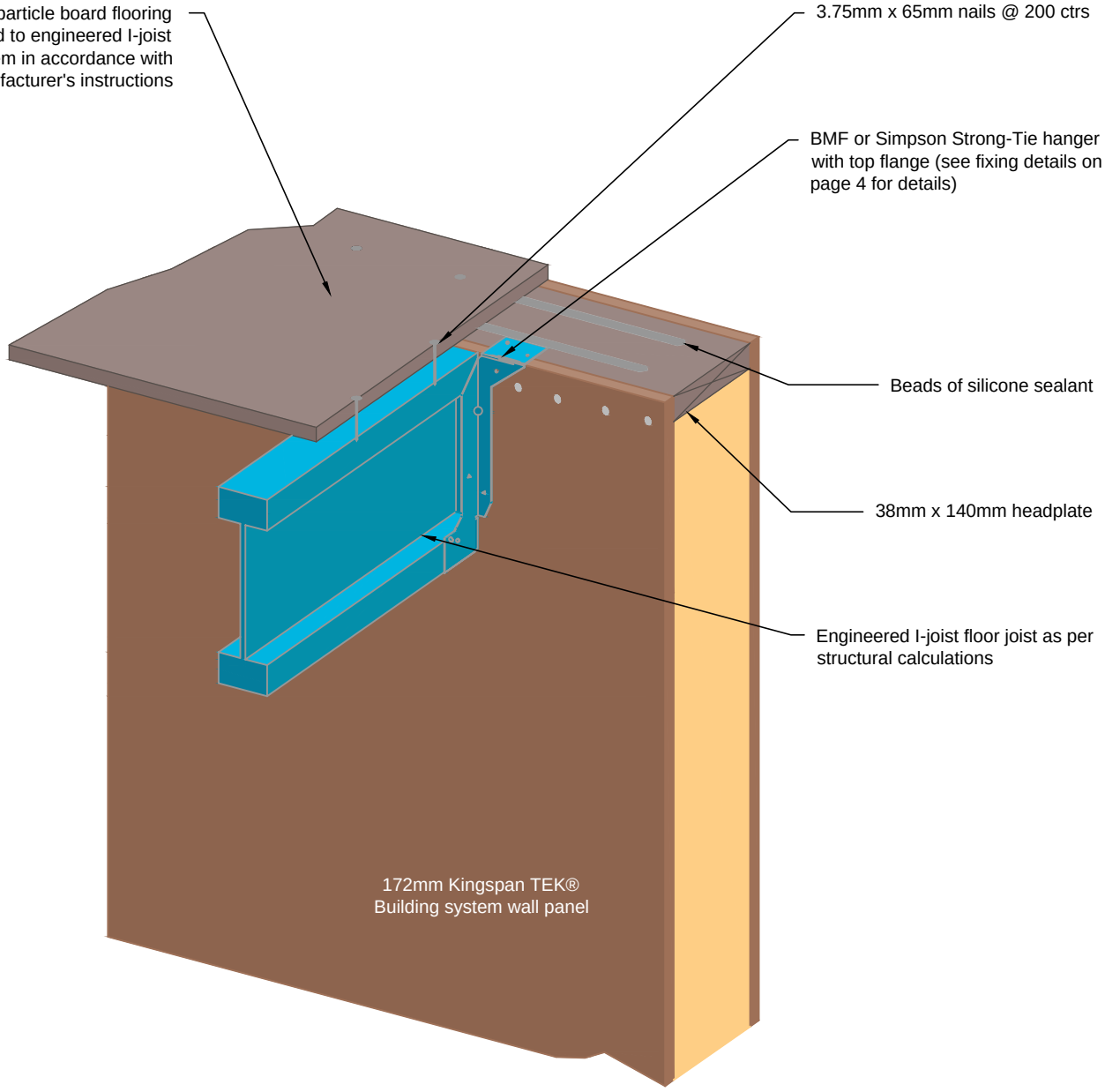

Kingspan TEK® Building System

Kingspan Insulation Limited
Pembridge, Leominster,
Herefordshire, HR6 9LA.
Tel: +44 (0)1544 388 601
Fax: +44 (0)1544 388 888
E-mail: info@kingspantek.co.uk

Kingspan Insulation Limited
Bree Ind. Estate, Castleblaney,
Co. Monaghan, Republic of Ireland
Tel: +353(0)42 979 5000
Fax: +353(0)42 975 4299
E-mail: info@kingspantek.ie

www.kingspantek.co.uk

Typical connection detail for engineered I-joist floor system.

TEK 172

KIL-F4-TEK-172

Date:	
21/10/14	
Drawn by: H.E.	Scale: NTS

F — 4

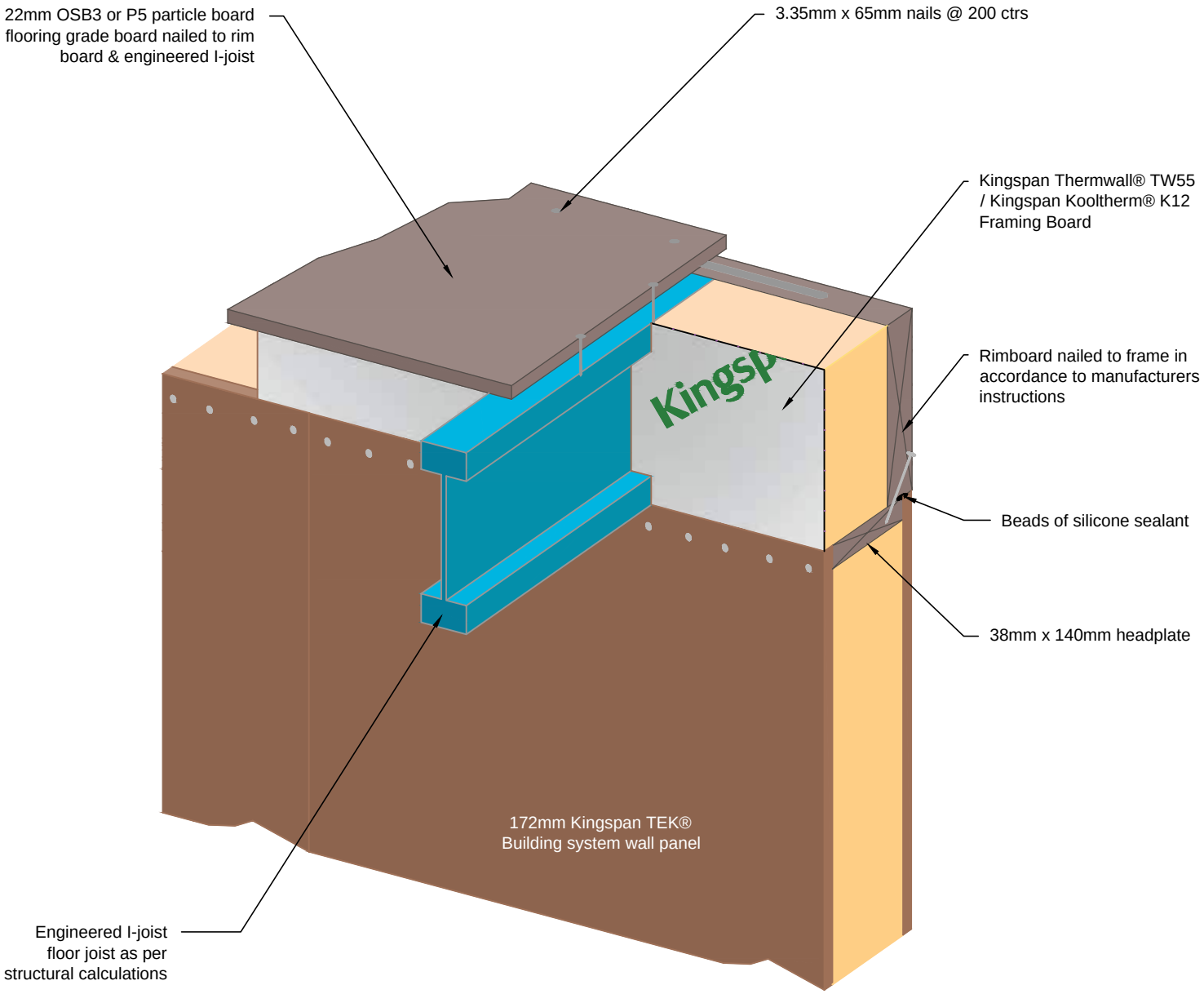

Kingspan TEK® Building System

Kingspan Insulation Limited
Pembridge, Leominster,
Herefordshire, HR6 9LA.
Tel: +44 (0)1544 388 601
Fax: +44 (0)1544 388 888
E-mail: info@kingspantek.co.uk

Kingspan Insulation Limited
Bree Ind. Estate, Castleblaney,
Co. Monaghan, Republic of Ireland
Tel: +353(0)42 979 5000
Fax: +353(0)42 975 4299
E-mail: info@kingspantek.ie

www.kingspantek.co.uk

Alternative I-joist / wall panel connection detail fixed to rimboard

TEK 172

KIL-F5-TEK-172

Date:	
21/10/14	
Drawn by: H.E.	Scale: NTS

F 5

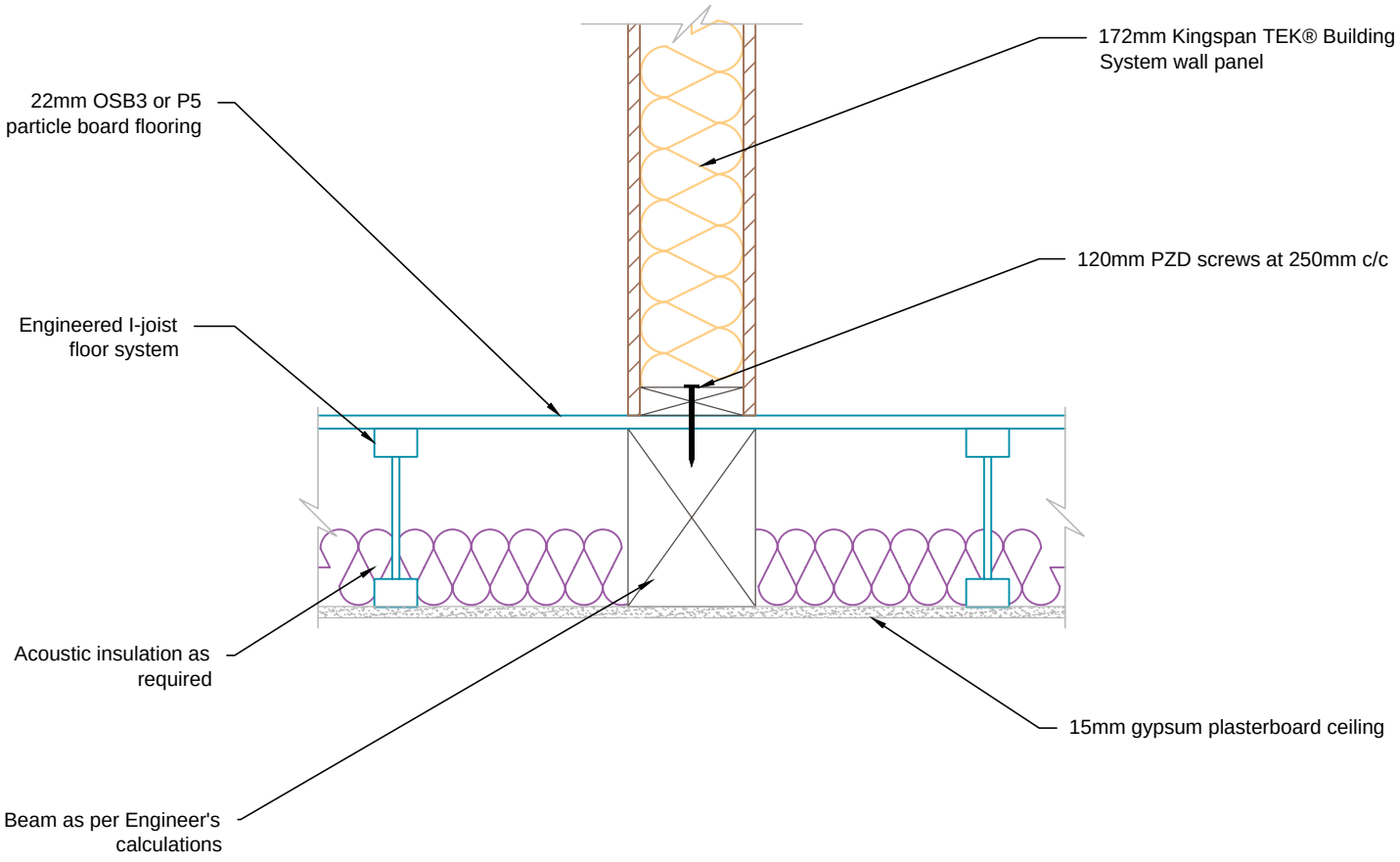

Kingspan TEK® Building System

Kingspan Insulation Limited
Pembridge, Leominster,
Herefordshire, HR6 9LA.
Tel: +44 (0)1544 388 601
Fax: +44 (0)1544 388 888
E-mail: info@kingspantek.co.uk

Kingspan Insulation Limited
Bree Ind. Estate, Castleblaney,
Co. Monaghan, Republic of Ireland
Tel: +353(0)42 979 5000
Fax: +353(0)42 975 4299
E-mail: info@kingspantek.ie

www.kingspantek.co.uk

Internal load bearing floor detail.

TEK 172

KIL-F6-TEK-172

Date:	
21/10/14	
Drawn by: H.E.	Scale: 1:10

F — 6

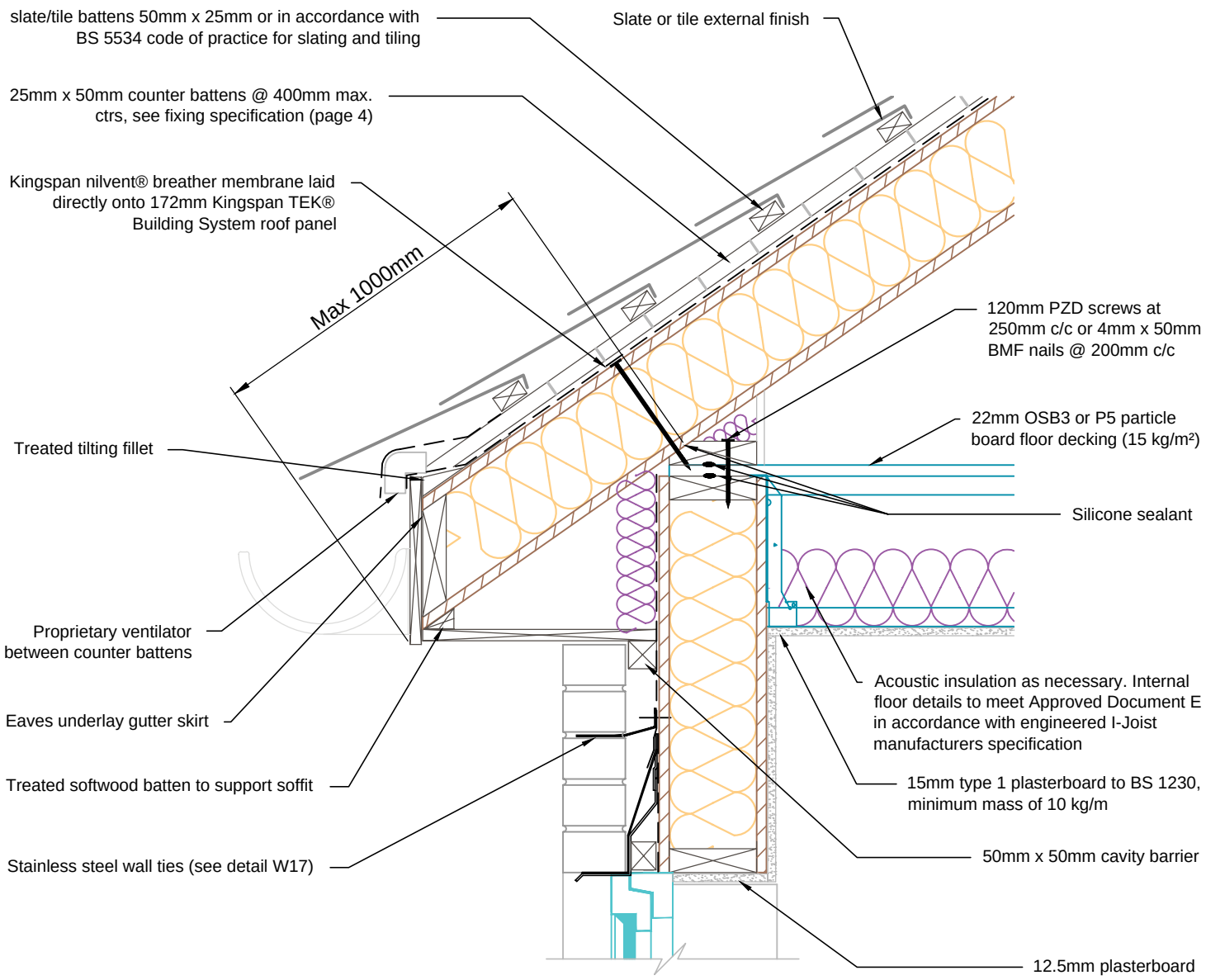

Kingspan TEK® Building System

Kingspan Insulation Limited
Pembridge, Leominster,
Herefordshire, HR6 9LA.
Tel: +44 (0)1544 388 601
Fax: +44 (0)1544 388 888
E-mail: info@kingspantek.co.uk

Kingspan Insulation Limited
Bree Ind. Estate, Castleblaney,
Co. Monaghan, Republic of Ireland
Tel: +353(0)42 979 5000
Fax: +353(0)42 975 4299
E-mail: info@kingspantek.ie

www.kingspantek.co.uk

Typical eaves detail vertical section with Kingspan TEK® Building System pitched roof panel

TEK 172

KIL-R1A-TEK-172-1

Date:	
31/10/14	
Drawn by: H.E.	Scale: 1:10

R — 1A

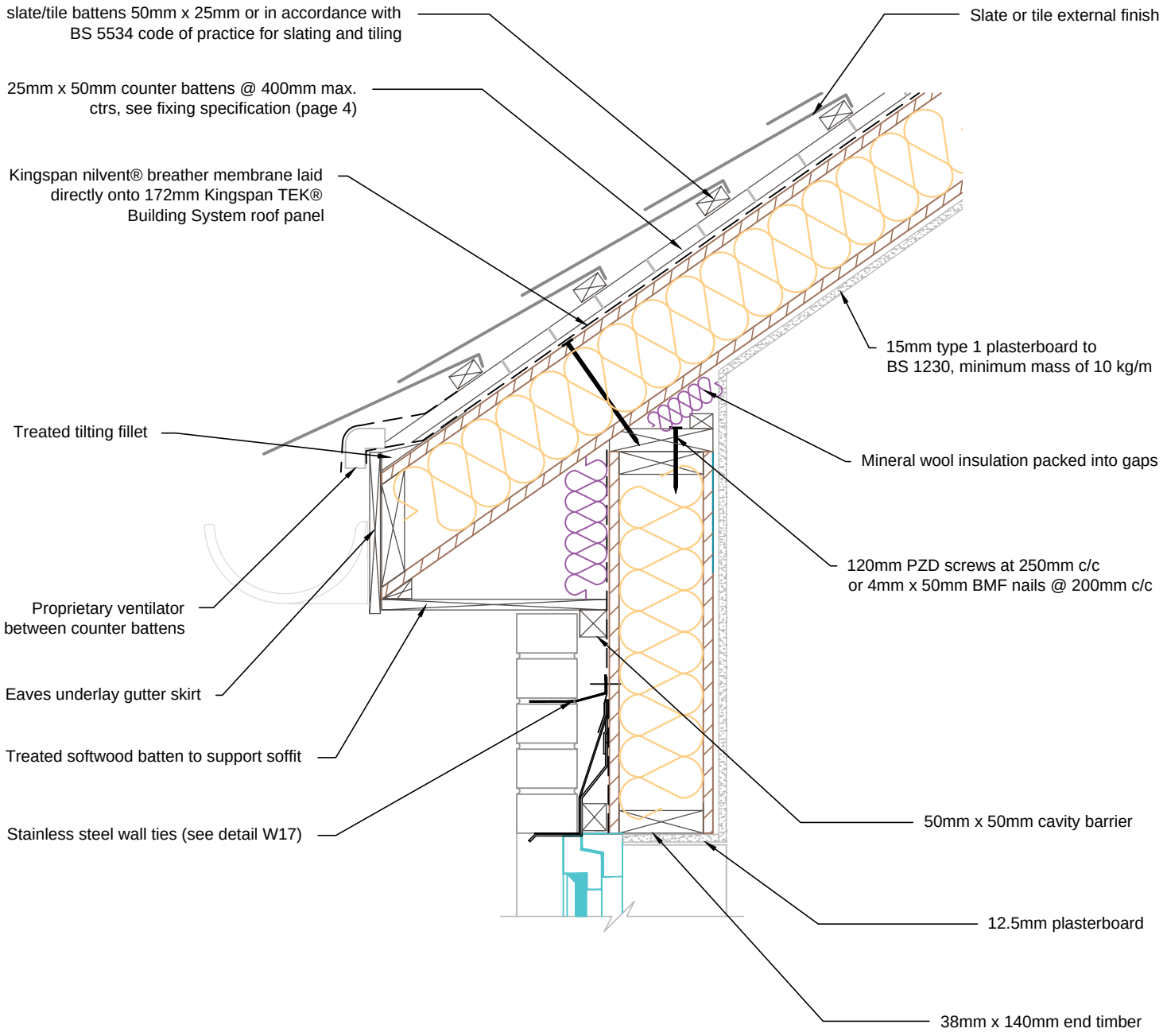

Kingspan TEK® Building System

Kingspan Insulation Limited
Pembridge, Leominster,
Herefordshire, HR6 9LA.
Tel: +44 (0)1544 388 601
Fax: +44 (0)1544 388 888
E-mail: info@kingspantek.co.uk

Kingspan Insulation Limited
Bree Ind. Estate, Castleblaney,
Co. Monaghan, Republic of Ireland
Tel: +353(0)42 979 5000
Fax: +353(0)42 975 4299
E-mail: info@kingspantek.ie

www.kingspantek.co.uk

Typical eaves detail vertical section with Kingspan TEK® Building System pitched roof panel (insulation at rafter level only)

TEK 172

KIL-R1B-TEK-172-1

Date:	
03/11/14	
Drawn by: H.E.	Scale: 1:10

R — 1B

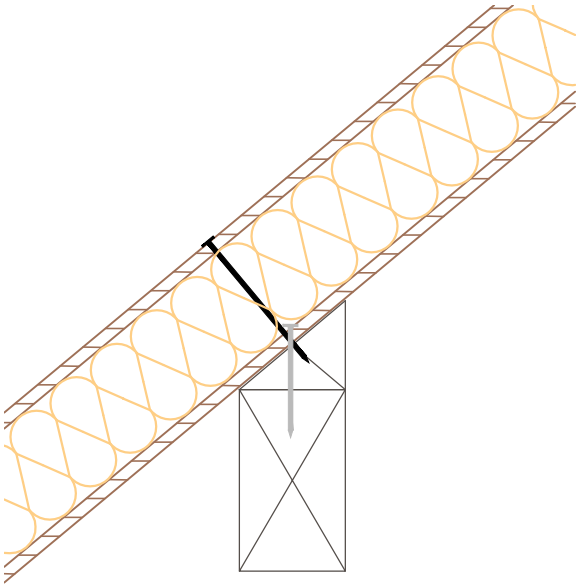

Purlin connection

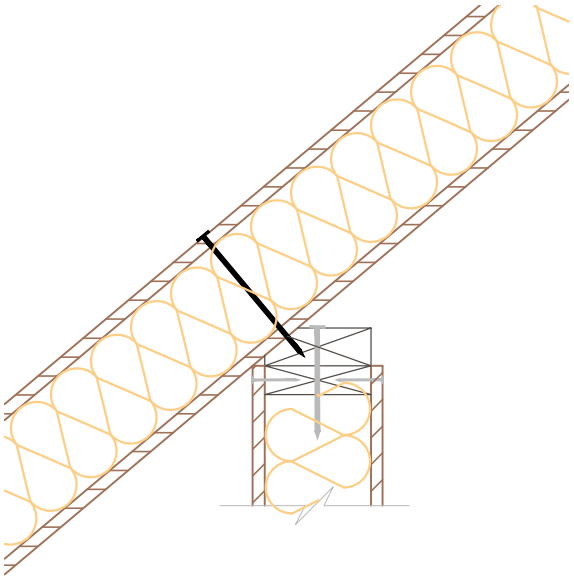

Dwarf wall connection

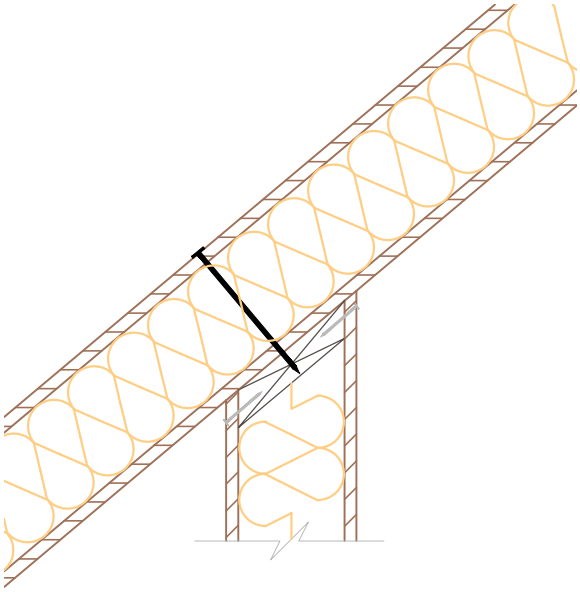

Internal wall connection

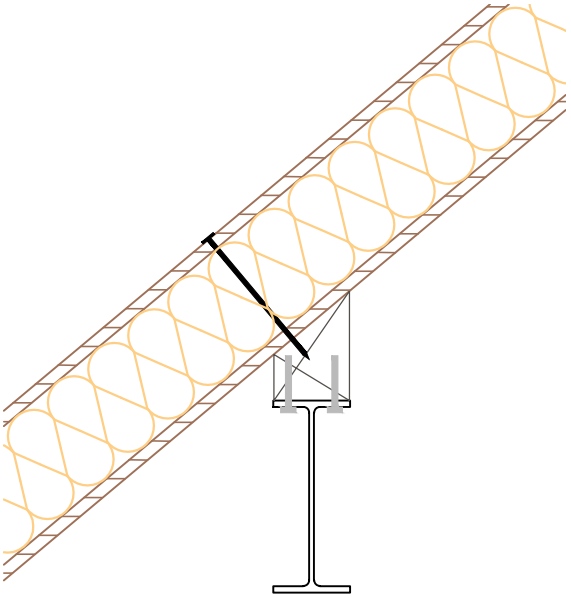

Steel purlin connection

Kingspan TEK Building System

Kingspan Insulation Limited
Pembridge, Leominster,
Herefordshire, HR6 9LA.
Tel: +44 (0)1544 388 601
Fax: +44 (0)1544 388 888
E-mail: info@kingspantek.co.uk

Kingspan Insulation Limited
Bree Ind. Estate, Castleblaney,
Co. Monaghan, Republic of Ireland
Tel: +353(0)42 979 5000
Fax: +353(0)42 975 4299
E-mail: info@kingspantek.ie

www.kingspantek.co.uk

Internal roof support details

TEK 172

KIL-R2-TEK-172

Date: 29/10/14

Drawn by: H.E.

Scale: 1:10

R 2

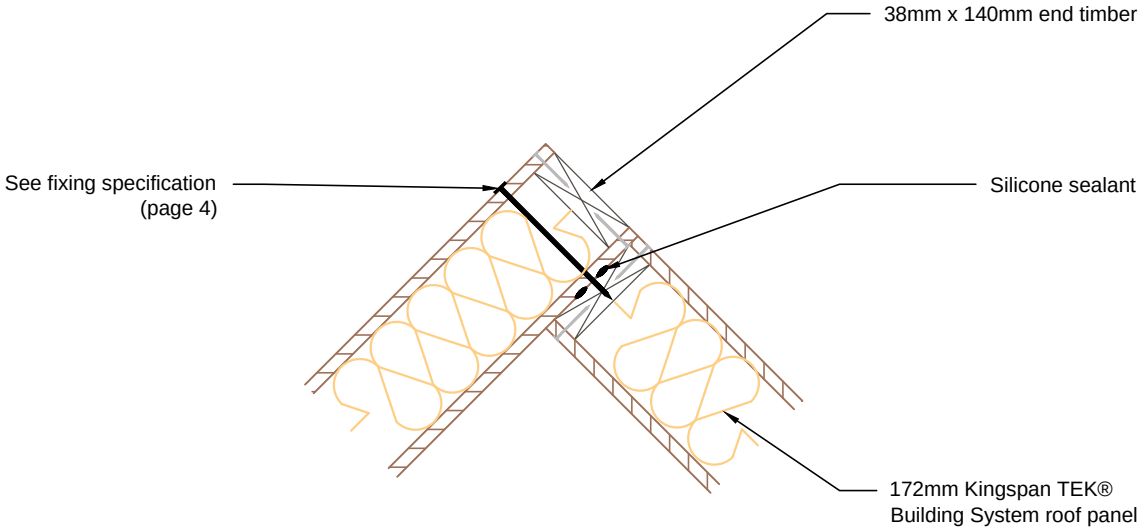

Overlaid ridge without support

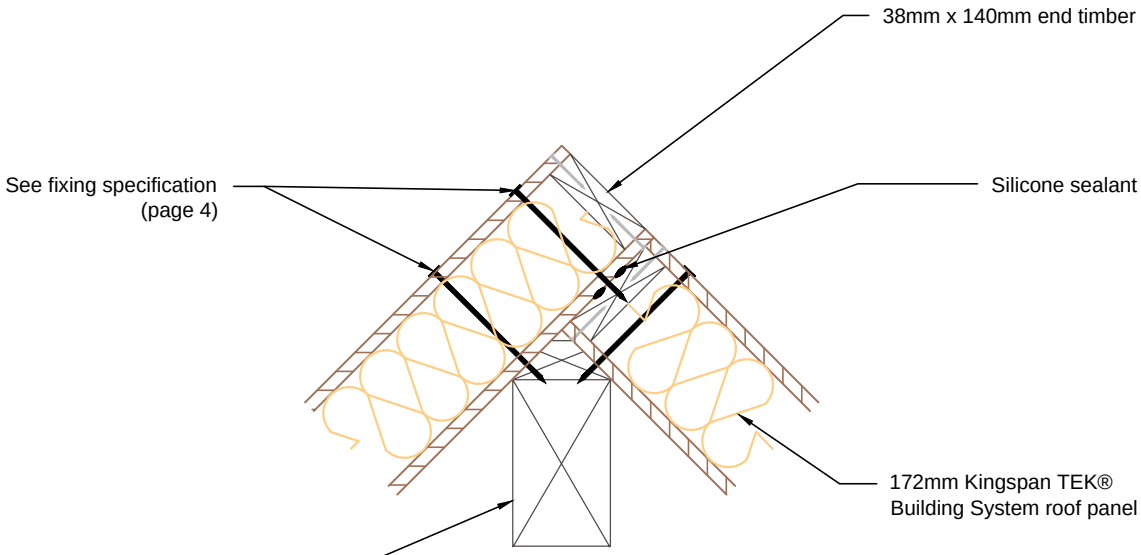

Overlaid ridge with support

Kingspan TEK® Building System

Kingspan Insulation Limited
Pembridge, Leominster,
Herefordshire, HR6 9LA.
Tel: +44 (0)1544 388 601
Fax: +44 (0)1544 388 888
E-mail: info@kingspantek.co.uk

Kingspan Insulation Limited
Bree Ind. Estate, Castleblaney,
Co. Monaghan, Republic of Ireland
Tel: +353(0)42 979 5000
Fax: +353(0)42 975 4299
E-mail: info@kingspantek.ie

www.kingspantek.co.uk

Typical roof panel overlaid ridge with and without support.

TEK 172

KIL-R3-TEK-172

Date:	
29/10/14	
Drawn by: H.E.	Scale: 1:10

R 3

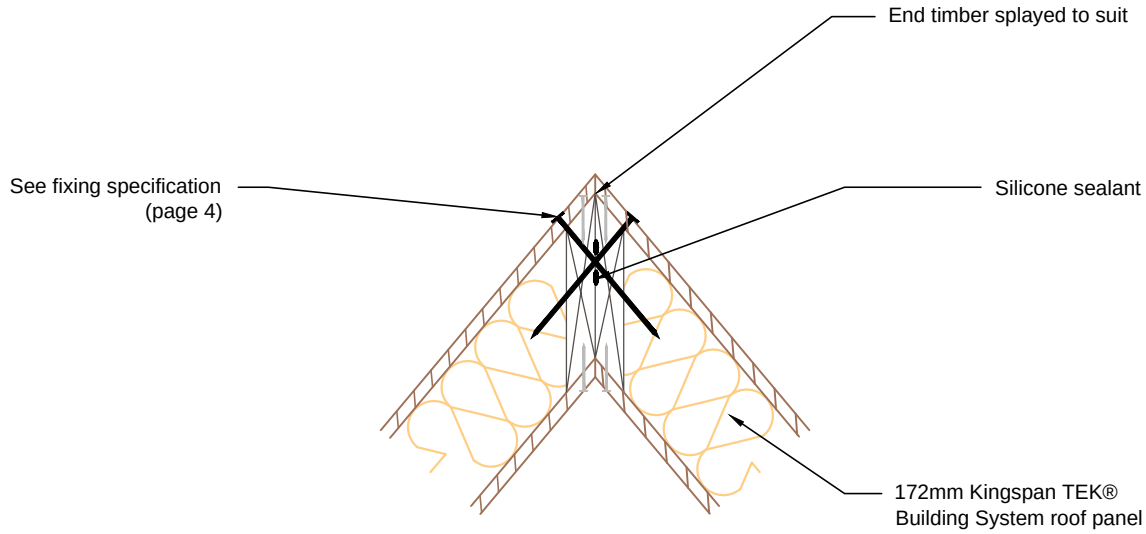

Mitred ridge without support

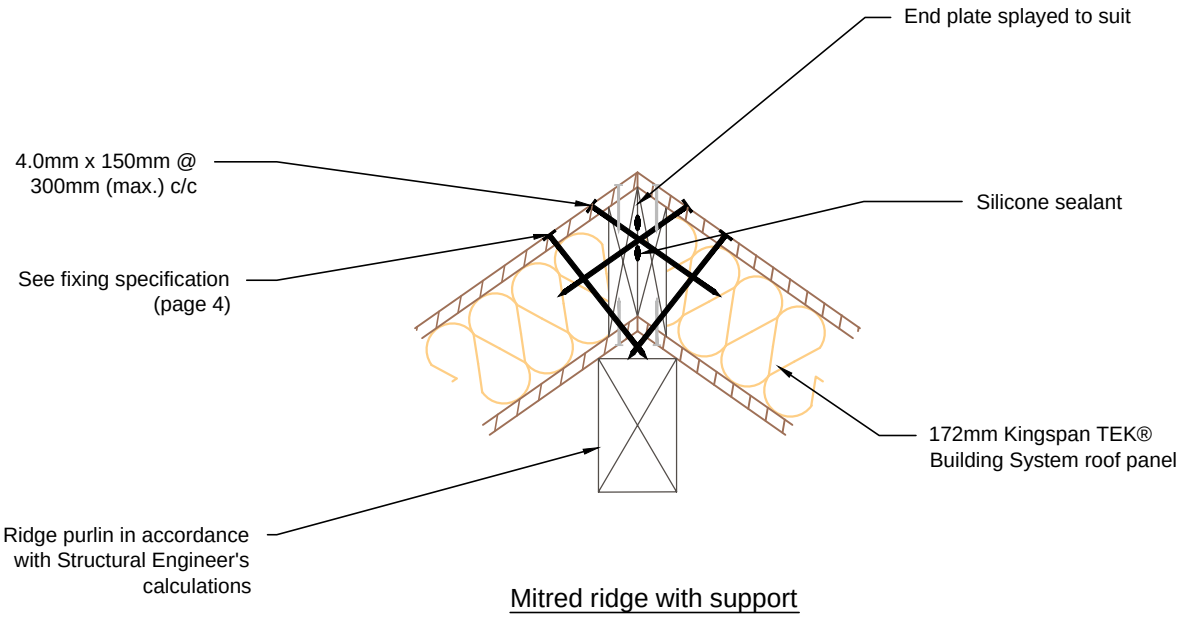

Mitred ridge with support

Kingspan TEK® Building System

Kingspan Insulation Limited
Pembridge, Leominster,
Herefordshire, HR6 9LA.
Tel: +44 (0)1544 388 601
Fax: +44 (0)1544 388 888
E-mail: info@kingspantek.co.uk

Kingspan Insulation Limited
Bree Ind. Estate, Castleblaney,
Co. Monaghan, Republic of Ireland
Tel: +353(0)42 979 5000
Fax: +353(0)42 975 4299
E-mail: info@kingspantek.ie

www.kingspantek.co.uk

Typical ridge connection details

TEK 172

KIL-R4-TEK-172

Date:	
29/10/14	
Drawn by: H.E.	Scale: 1:10

R 4

Dormer Perspective

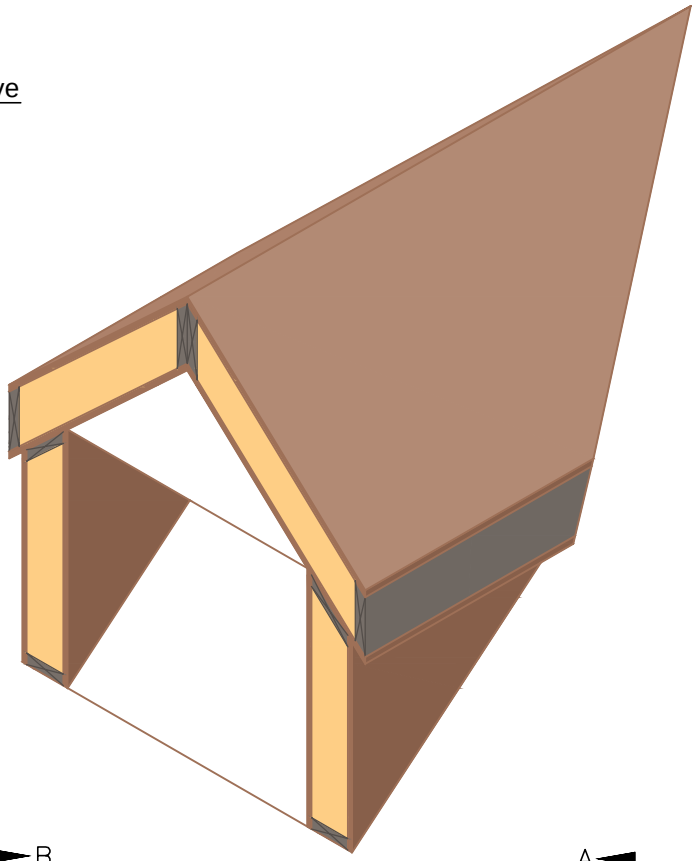

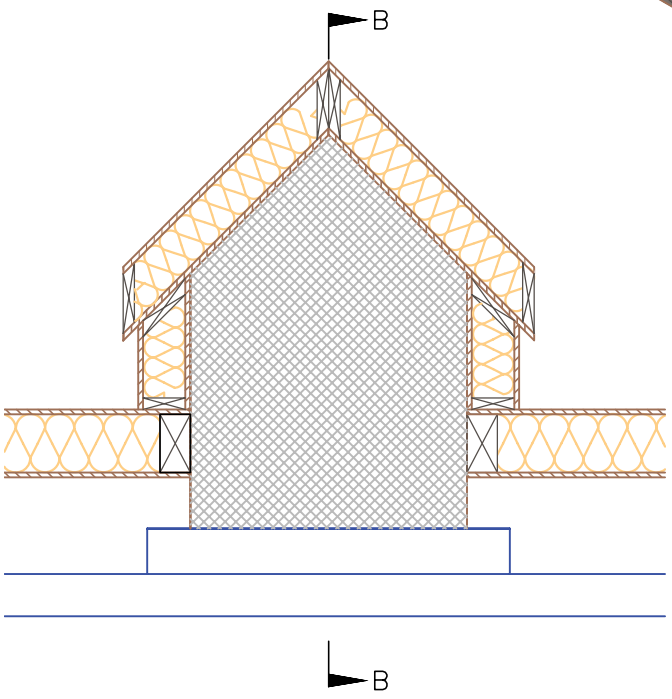

Section AA

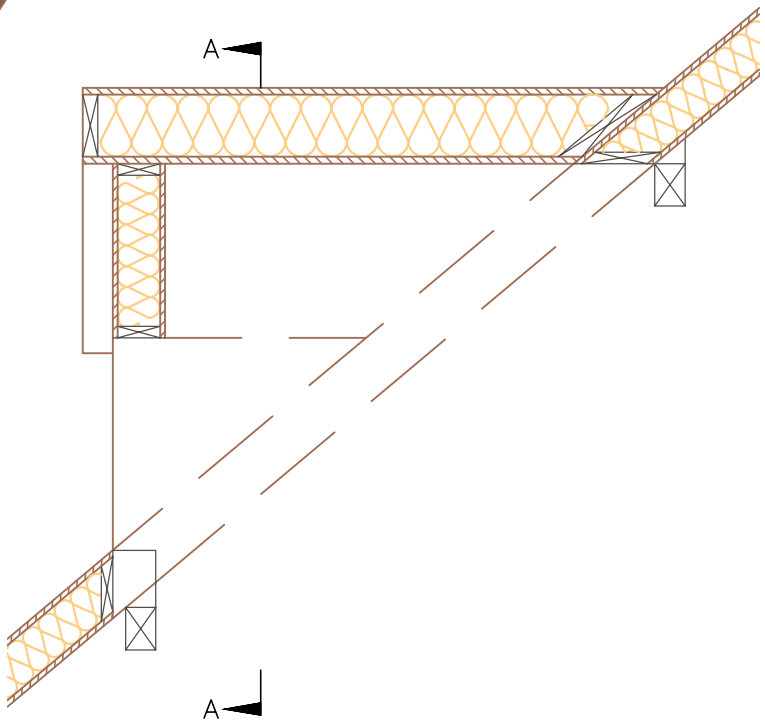

Section BB

Kingspan TEK Building System

Kingspan Insulation Limited
Pembridge, Leominster,
Herefordshire, HR6 9LA.
Tel: +44 (0)1544 388 601
Fax: +44 (0)1544 388 888
E-mail: info@kingspantek.co.uk

Kingspan Insulation Limited
Bree Ind. Estate, Castleblaney,
Co. Monaghan, Republic of Ireland
Tel: +353(0)42 979 5000
Fax: +353(0)42 975 4299
E-mail: info@kingspantek.ie

www.kingspantek.co.uk

Room in Roof - dormer perspective & section detail

TEK 172

KIL-R5-TEK-172

Date:	
29/10/14	
Drawn by: H.E.	Scale: 1:25

R 5

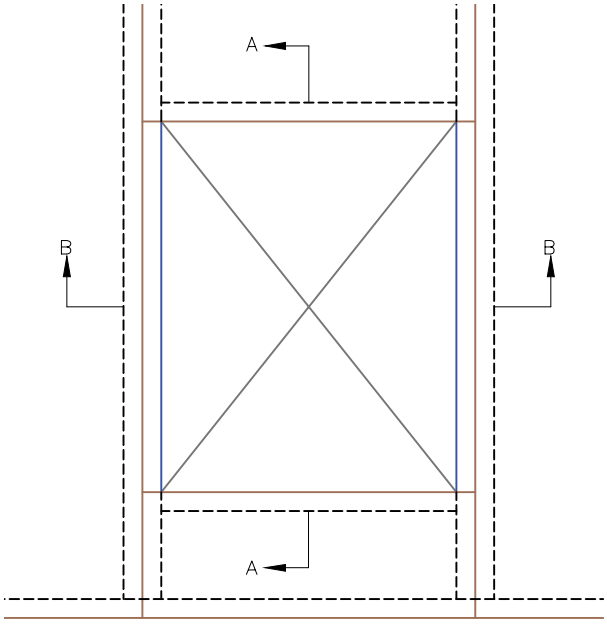

Panel elevation showing opening for rooflight - 1:20

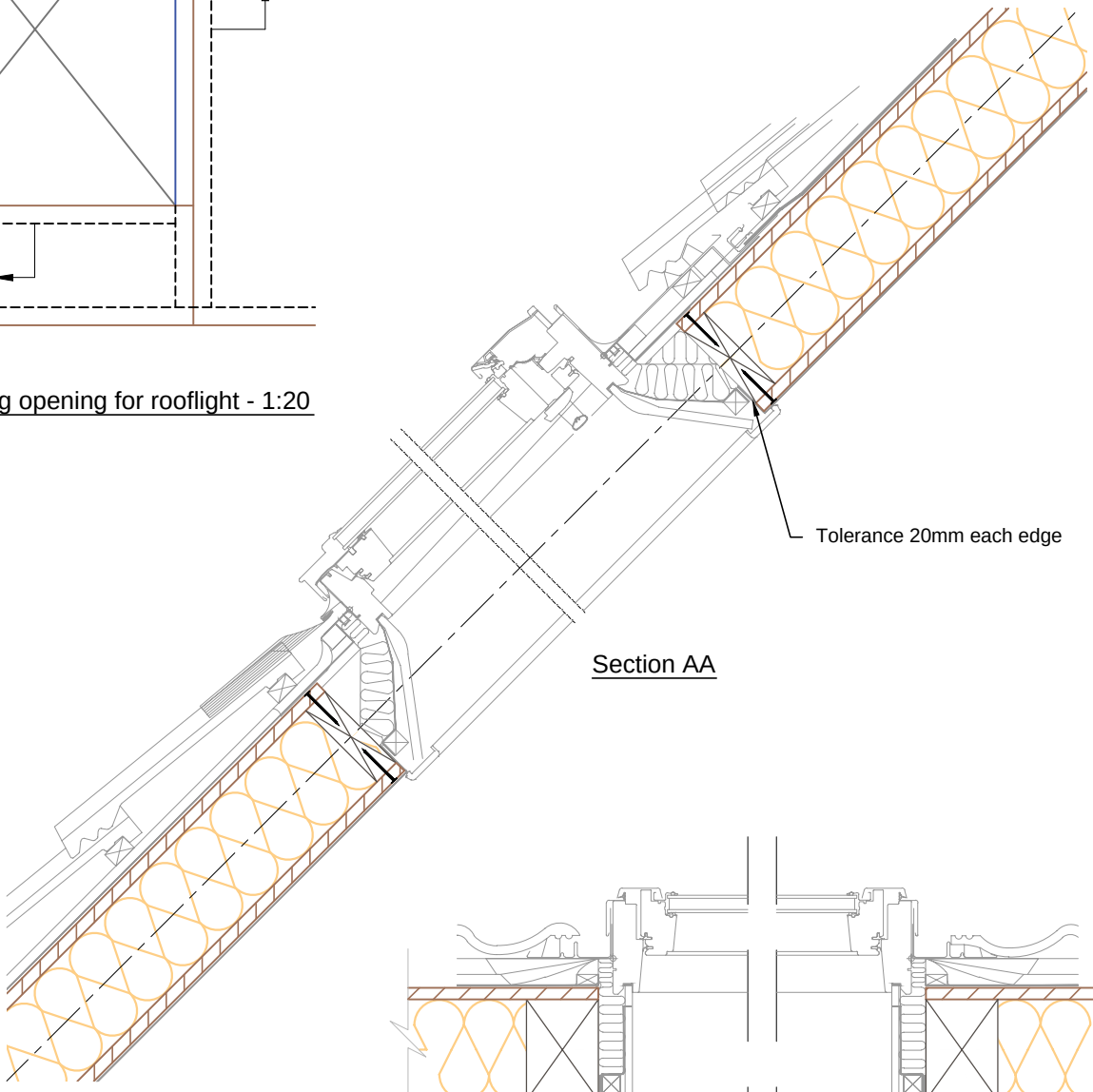

Section AA

Section BB

Kingspan Insulation Limited
Pembridge, Leominster,
Herefordshire, HR6 9LA.
Tel: +44 (0)1544 388 601
Fax: +44 (0)1544 388 888
E-mail: info@kingspantek.co.uk

Kingspan Insulation Limited
Bree Ind. Estate, Castleblaney,
Co. Monaghan, Republic of Ireland
Tel: +353(0)42 979 5000
Fax: +353(0)42 975 4299
E-mail: info@kingspantek.ie

www.kingspantek.co.uk

Typical Rooflight detail.

TEK 172

KIL-R6-TEK-172

Date:	
29/10/14	
Drawn by: H.E.	Scale: 1:10

R 6

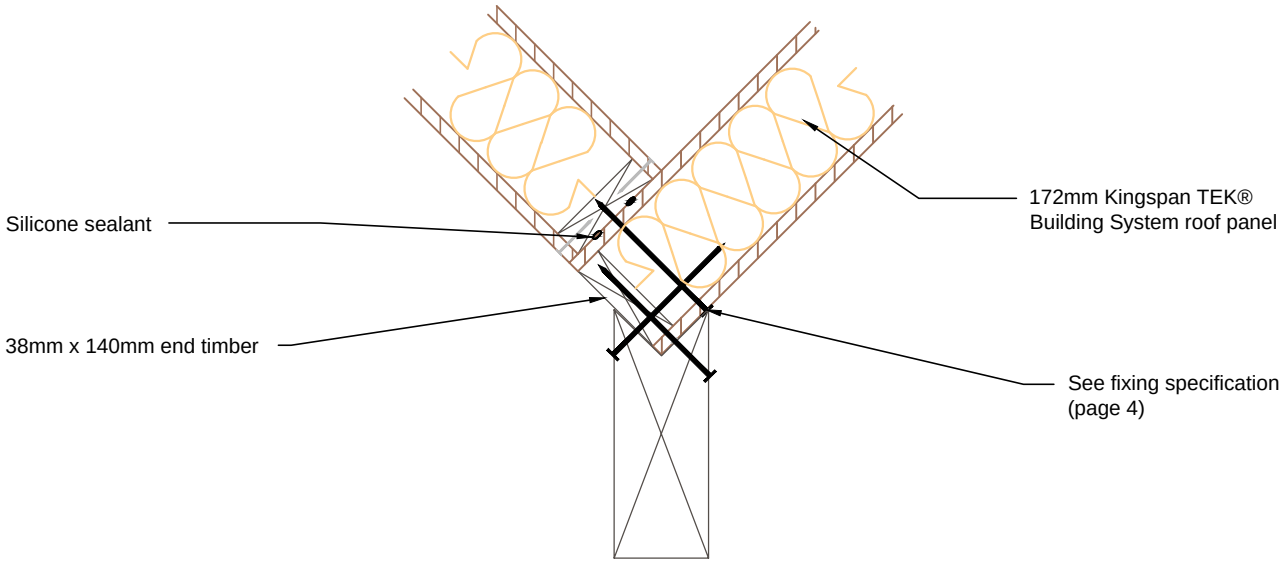

Roof panels connected over valley rafter with support

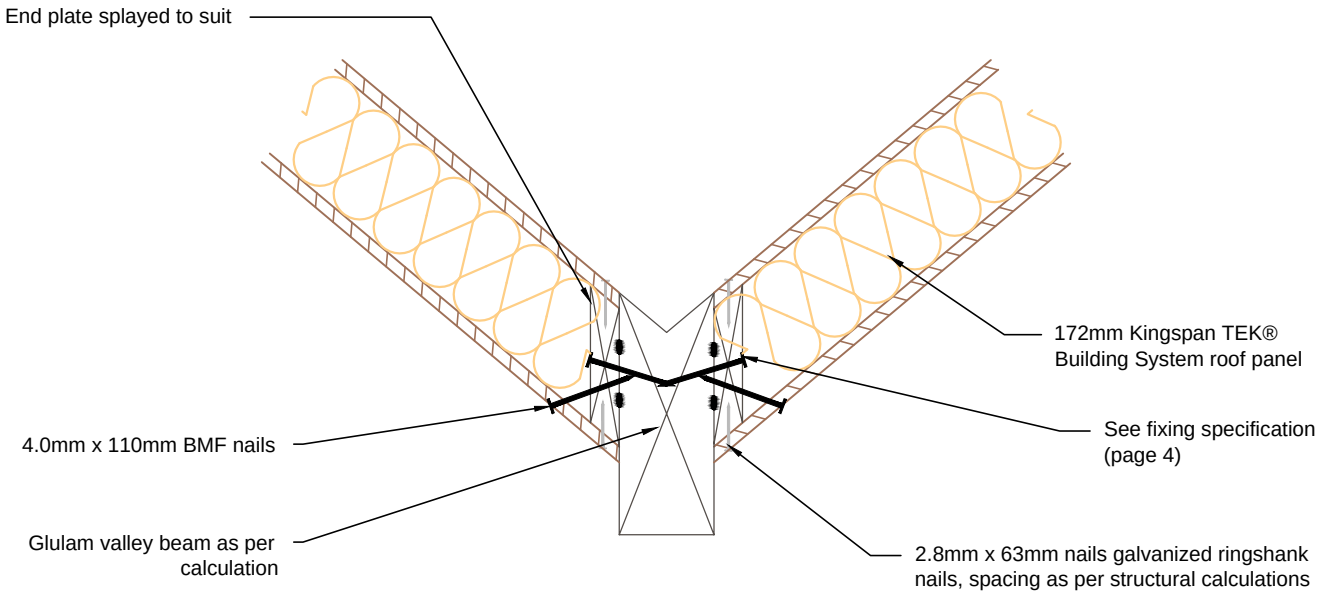

Roof panels connected to valley rafter

Kingspan TEK® Building System

Kingspan Insulation Limited
Pembridge, Leominster,
Herefordshire, HR6 9LA.
Tel: +44 (0)1544 388 601
Fax: +44 (0)1544 388 888
E-mail: info@kingspantek.co.uk

Kingspan Insulation Limited
Bree Ind. Estate, Castleblaney,
Co. Monaghan, Republic of Ireland
Tel: +353(0)42 979 5000
Fax: +353(0)42 975 4299
E-mail: info@kingspantek.ie

www.kingspantek.co.uk

Typical valley detail.

TEK 172

KIL-R7-TEK-172

Date:	
29/10/14	
Drawn by: H.E.	Scale: 1:10

R 7

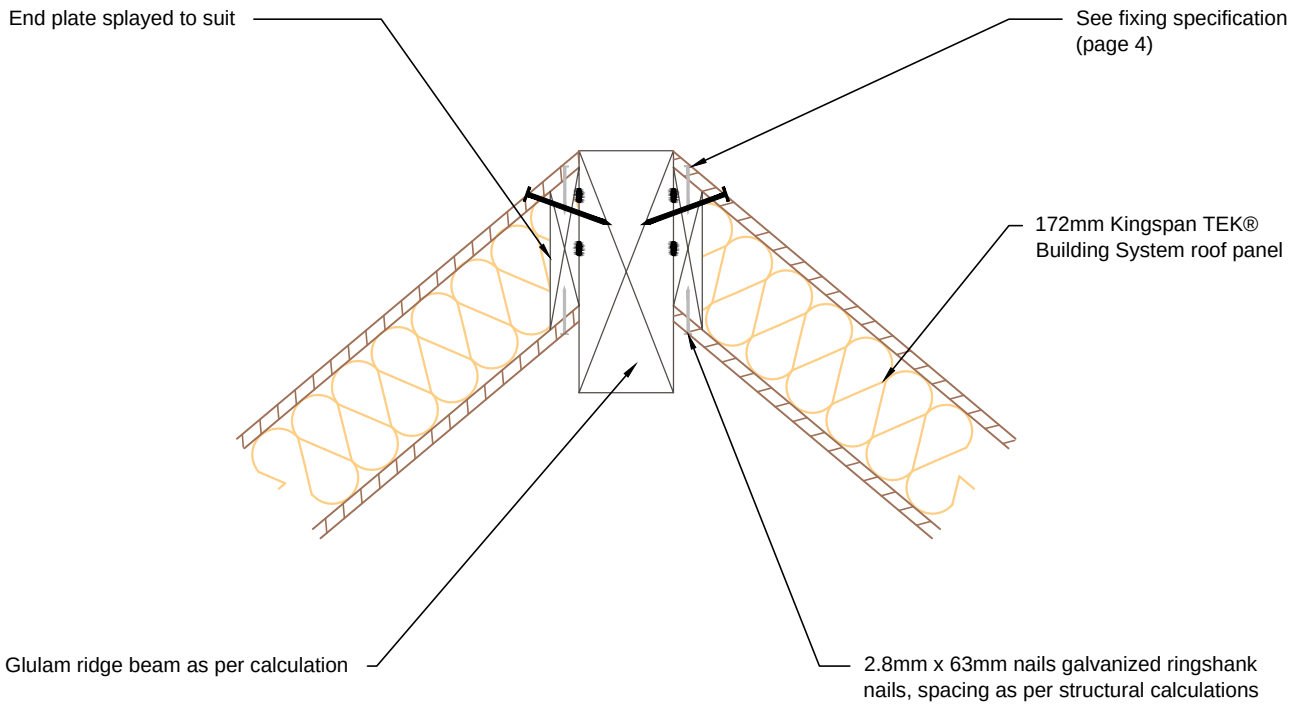

Kingspan TEK® Building System

Kingspan Insulation Limited
Pembridge, Leominster,
Herefordshire, HR6 9LA.
Tel: +44 (0)1544 388 601
Fax: +44 (0)1544 388 888
E-mail: info@kingspantek.co.uk

Kingspan Insulation Limited
Bree Ind. Estate, Castleblaney,
Co. Monaghan, Republic of Ireland
Tel: +353(0)42 979 5000
Fax: +353(0)42 975 4299
E-mail: info@kingspantek.ie

www.kingspantek.co.uk

Typical hip detail showing roof panels connected to hip rafter

TEK 172

KIL-R8-TEK-172

Date: 29/10/14

Drawn by: H.E.

Scale: 1:10

R 8

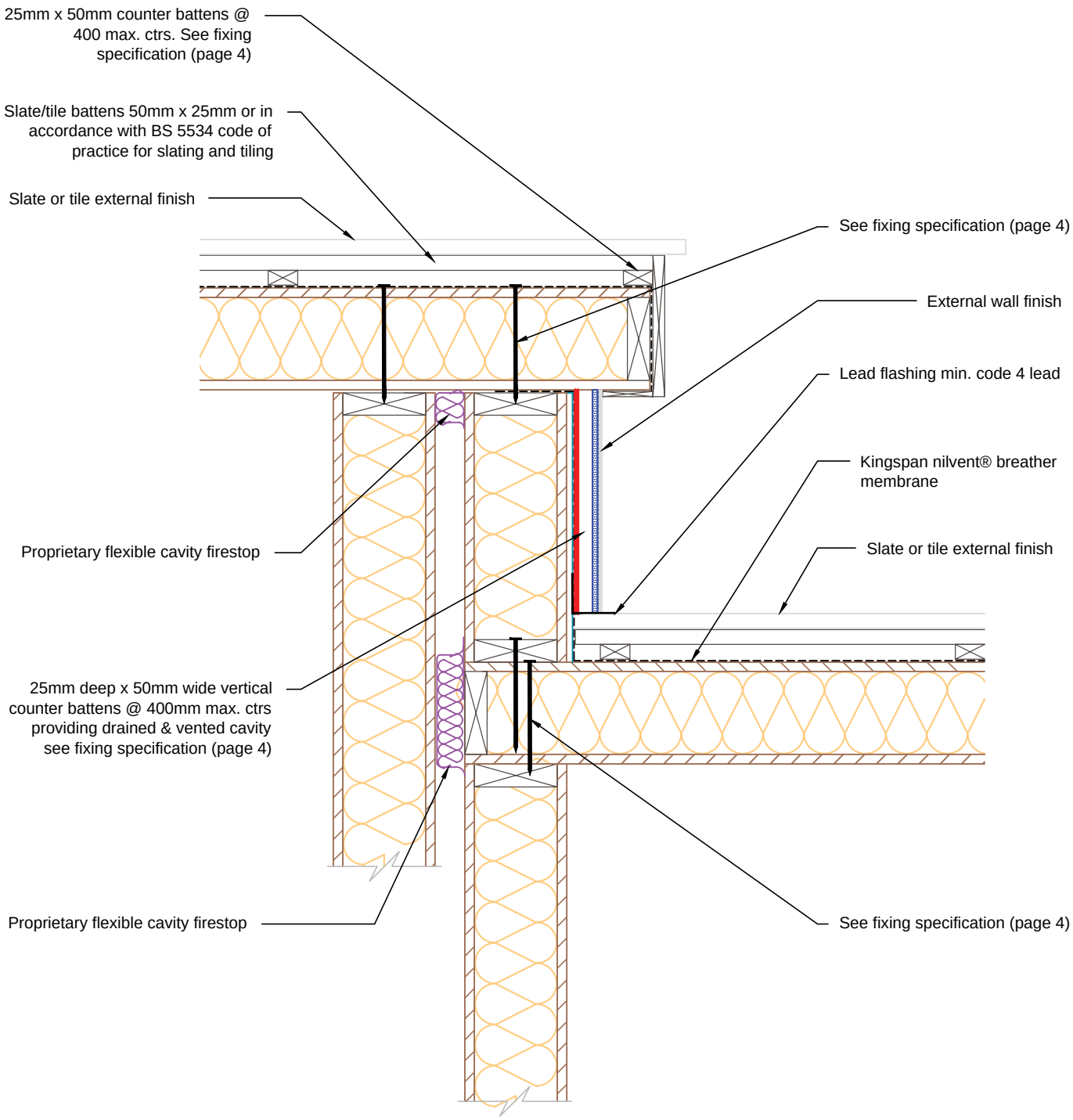

Kingspan TEK® Building System

Kingspan Insulation Limited
Pembridge, Leominster,
Herefordshire, HR6 9LA.
Tel: +44 (0)1544 388 601
Fax: +44 (0)1544 388 888
E-mail: info@kingspantek.co.uk

Kingspan Insulation Limited
Bree Ind. Estate, Castleblaney,
Co. Monaghan, Republic of Ireland
Tel: +353(0)42 979 5000
Fax: +353(0)42 975 4299
E-mail: info@kingspantek.ie

www.kingspantek.co.uk

Roof to roof - change in level detail

TEK 172

KIL-R9-TEK-172

Date: 29/10/14

Drawn by: H.E.

Scale: 1:10

R 9

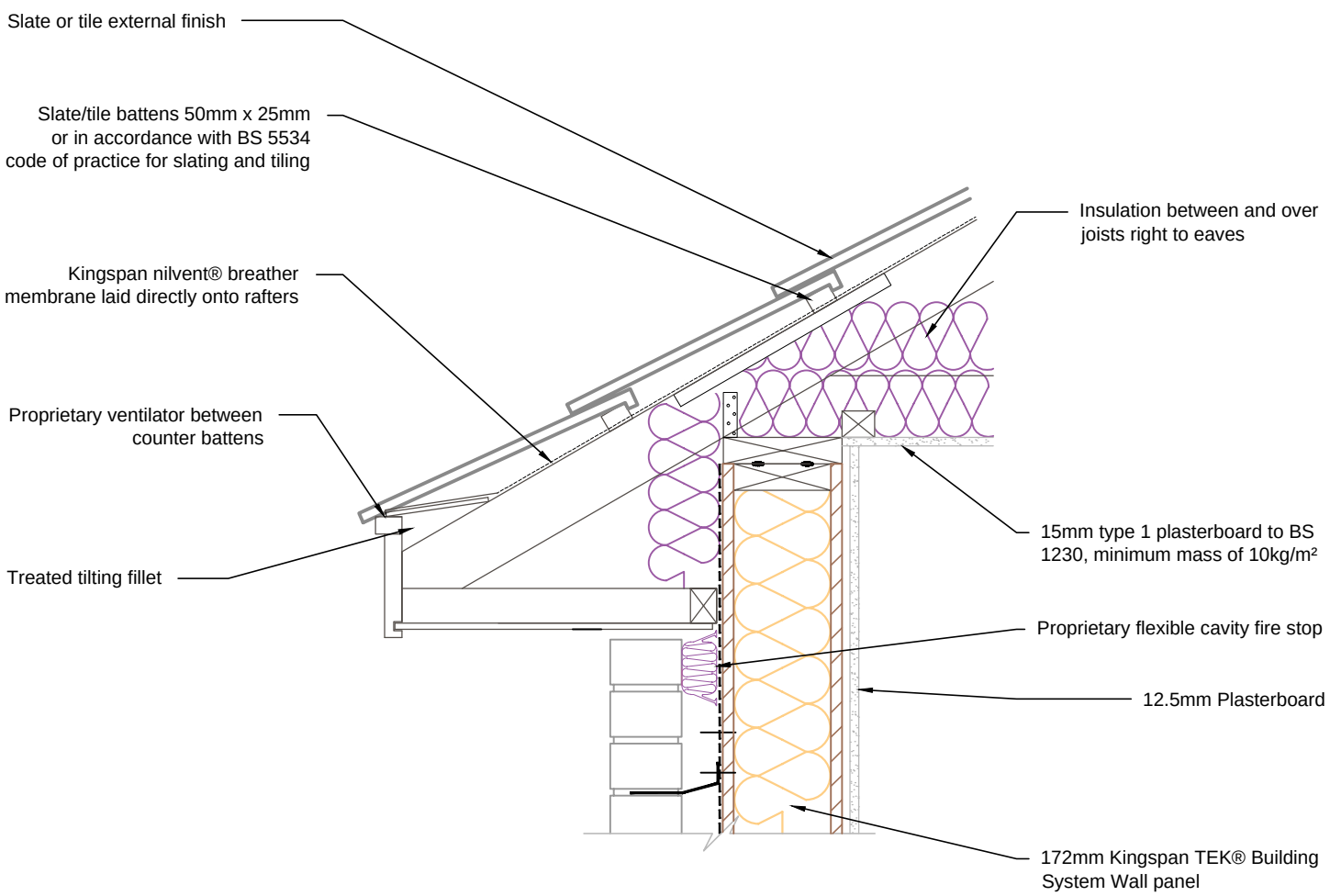

Kingspan TEK® Building System

Kingspan Insulation Limited
Pembridge, Leominster,
Herefordshire, HR6 9LA.
Tel: +44 (0)1544 388 601
Fax: +44 (0)1544 388 888
E-mail: info@kingspantek.co.uk

Kingspan Insulation Limited
Bree Ind. Estate, Castleblaney,
Co. Monaghan, Republic of Ireland
Tel: +353(0)42 979 5000
Fax: +353(0)42 975 4299
E-mail: info@kingspantek.ie

www.kingspantek.co.uk

Typical eaves detail vertical section with truss rafter pitched roof

TEK 172

KIL-R10-TEK-172

Date:	
29/10/14	
Drawn by: H.E.	Scale: 1:10

R 10

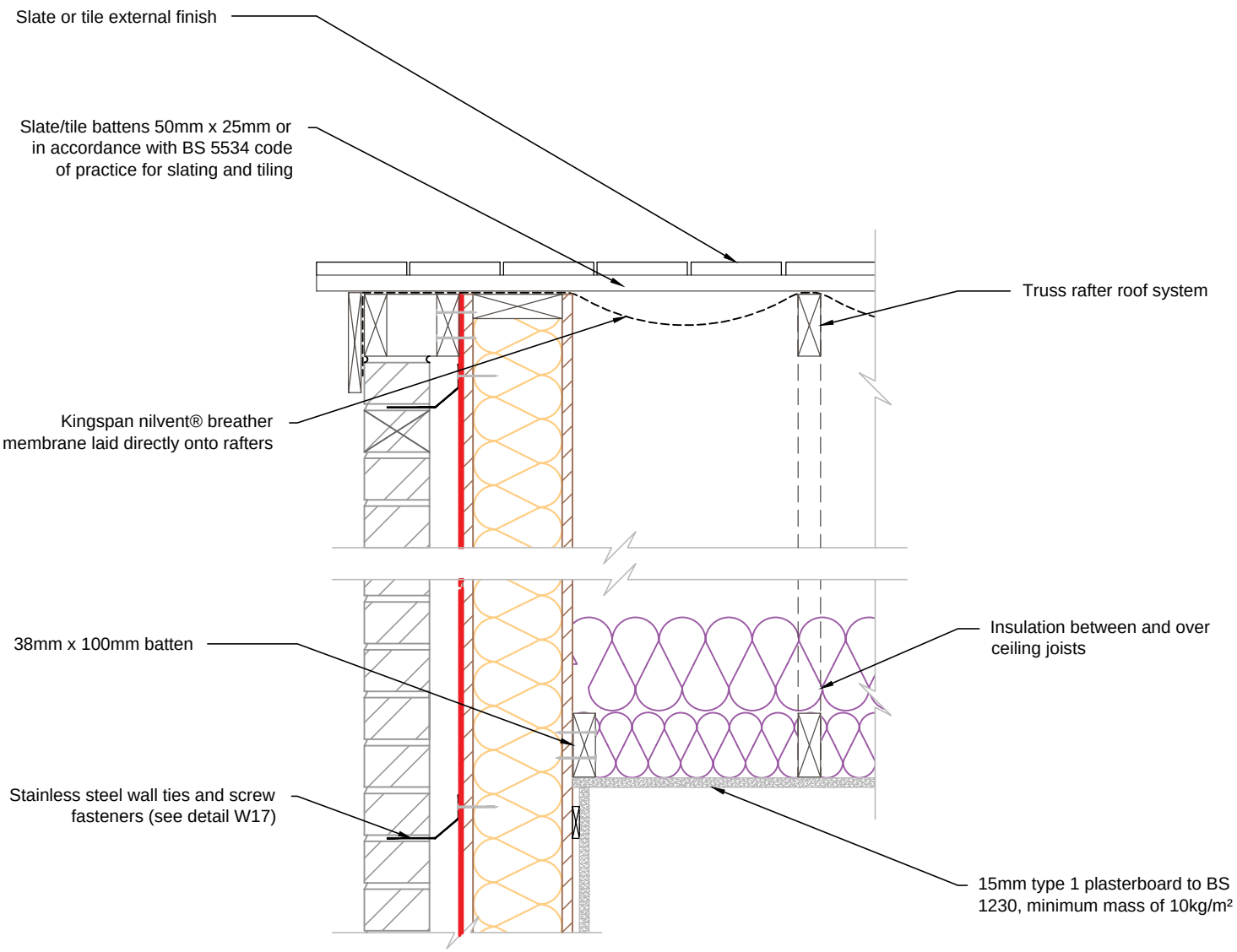

Kingspan TEK® Building System

Kingspan Insulation Limited
Pembridge, Leominster,
Herefordshire, HR6 9LA.
Tel: +44 (0)1544 388 601
Fax: +44 (0)1544 388 888
E-mail: info@kingspantek.co.uk

Kingspan Insulation Limited
Bree Ind. Estate, Castleblaney,
Co. Monaghan, Republic of Ireland
Tel: +353(0)42 979 5000
Fax: +353(0)42 975 4299
E-mail: info@kingspantek.ie

www.kingspantek.co.uk

Kingspan TEK® Building System gable junction - truss rafter roof with insulation at ceiling level

TEK 172

KIL-R11-TEK-172

Date:	
29/10/14	
Drawn by: H.E.	Scale: 1:10

R 11

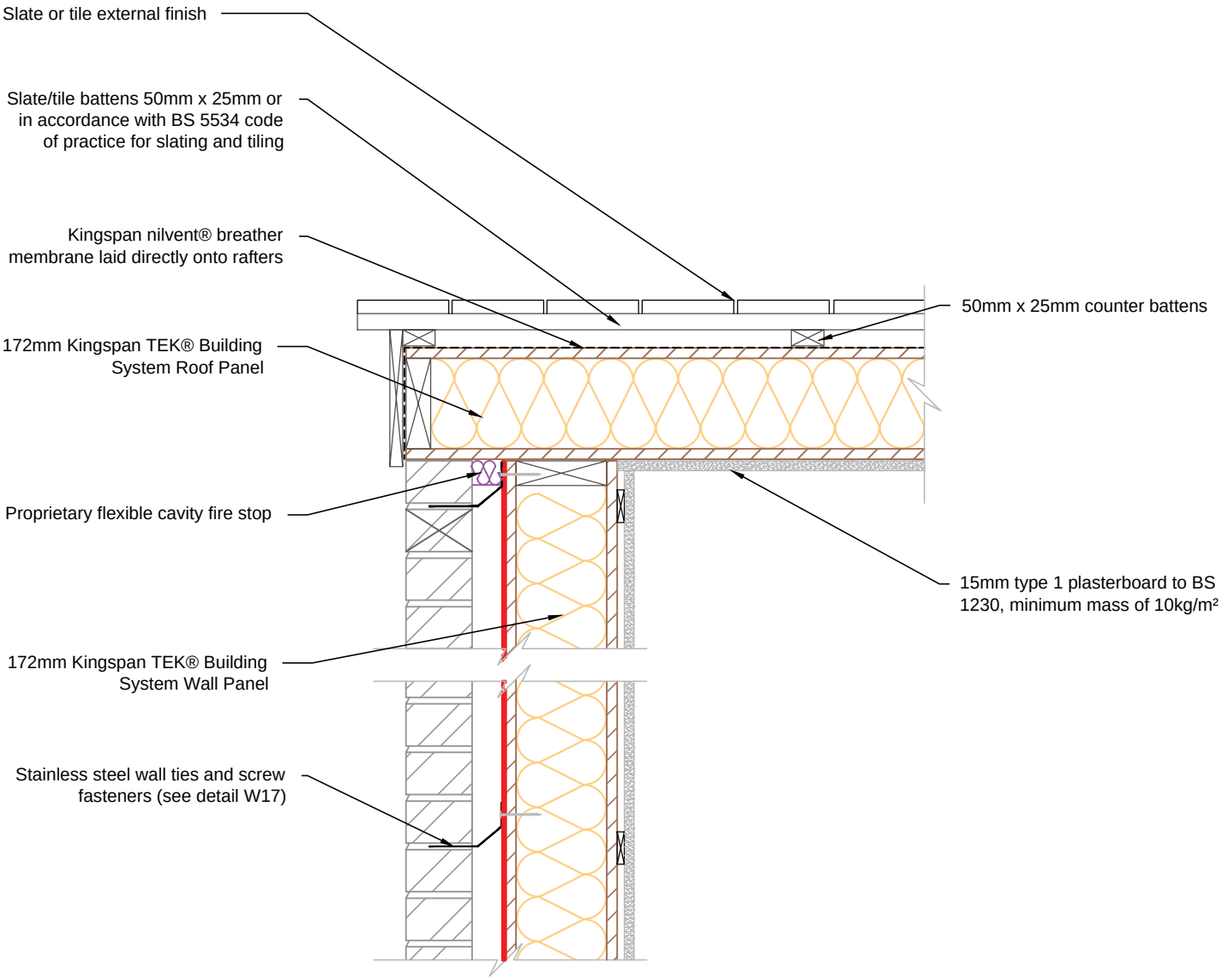

Kingspan TEK Building System

Kingspan Insulation Limited
Pembridge, Leominster,
Herefordshire, HR6 9LA.
Tel: +44 (0)1544 388 601
Fax: +44 (0)1544 388 888
E-mail: info@kingspantek.co.uk

Kingspan Insulation Limited
Bree Ind. Estate, Castleblaney,
Co. Monaghan, Republic of Ireland
Tel: +353(0)42 979 5000
Fax: +353(0)42 975 4299
E-mail: info@kingspantek.ie

www.kingspantek.co.uk

Kingspan TEK® Building System gable junction - Kingspan TEK® Building System Roof Panel

TEK 172

KIL-R12-TEK-172

Date:	
29/10/14	
Drawn by: H.E.	Scale: 1:10

R 12

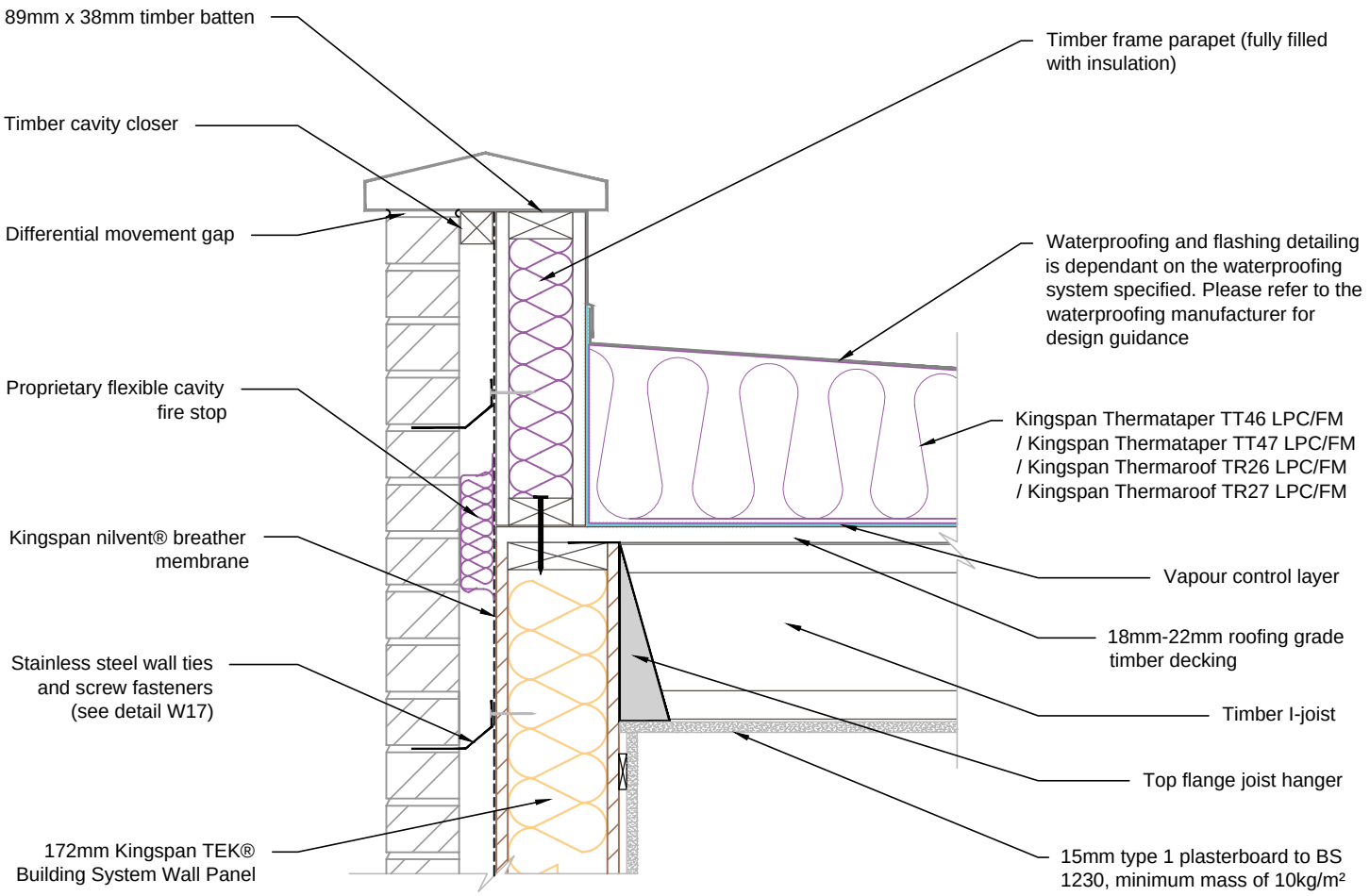

Kingspan TEK® Building System

Kingspan Insulation Limited
Pembridge, Leominster,
Herefordshire, HR6 9LA.
Tel: +44 (0)1544 388 601
Fax: +44 (0)1544 388 888
E-mail: info@kingspantek.co.uk

Kingspan Insulation Limited
Bree Ind. Estate, Castleblaney,
Co. Monaghan, Republic of Ireland
Tel: +353(0)42 979 5000
Fax: +353(0)42 975 4299
E-mail: info@kingspantek.ie

www.kingspantek.co.uk

Kingspan TEK® Building System external wall junction with warm deck flat roof - timber frame parapet wall

TEK 172

KIL-R13-TEK-172

Date:	
29/10/14	
Drawn by: H.E.	Scale: 1:10

R 13

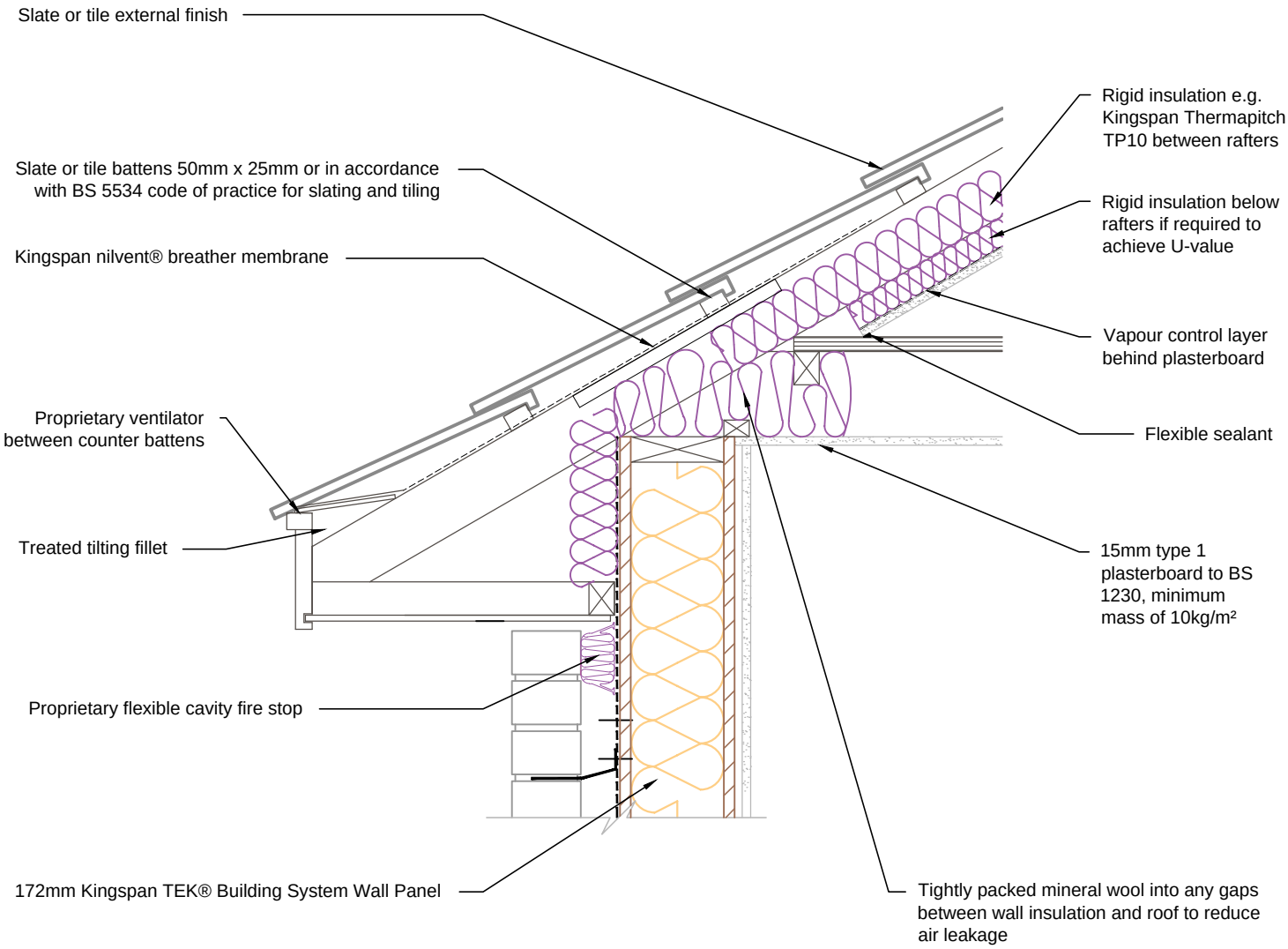

Kingspan TEK® Building System

Kingspan Insulation Limited
Pembridge, Leominster,
Herefordshire, HR6 9LA.
Tel: +44 (0)1544 388 601
Fax: +44 (0)1544 388 888
E-mail: info@kingspantek.co.uk

Kingspan Insulation Limited
Bree Ind. Estate, Castleblaney,
Co. Monaghan, Republic of Ireland
Tel: +353(0)42 979 5000
Fax: +353(0)42 975 4299
E-mail: info@kingspantek.ie

www.kingspantek.co.uk

Typical eaves detail Kingspan TEK® Building System external wall junction with pitched roof & internal floor - insulated at line of pitch

TEK 172

KIL-R14A-TEK-172

Date:	
30/10/14	
Drawn by: H.E.	Scale: 1:10

R — 14A

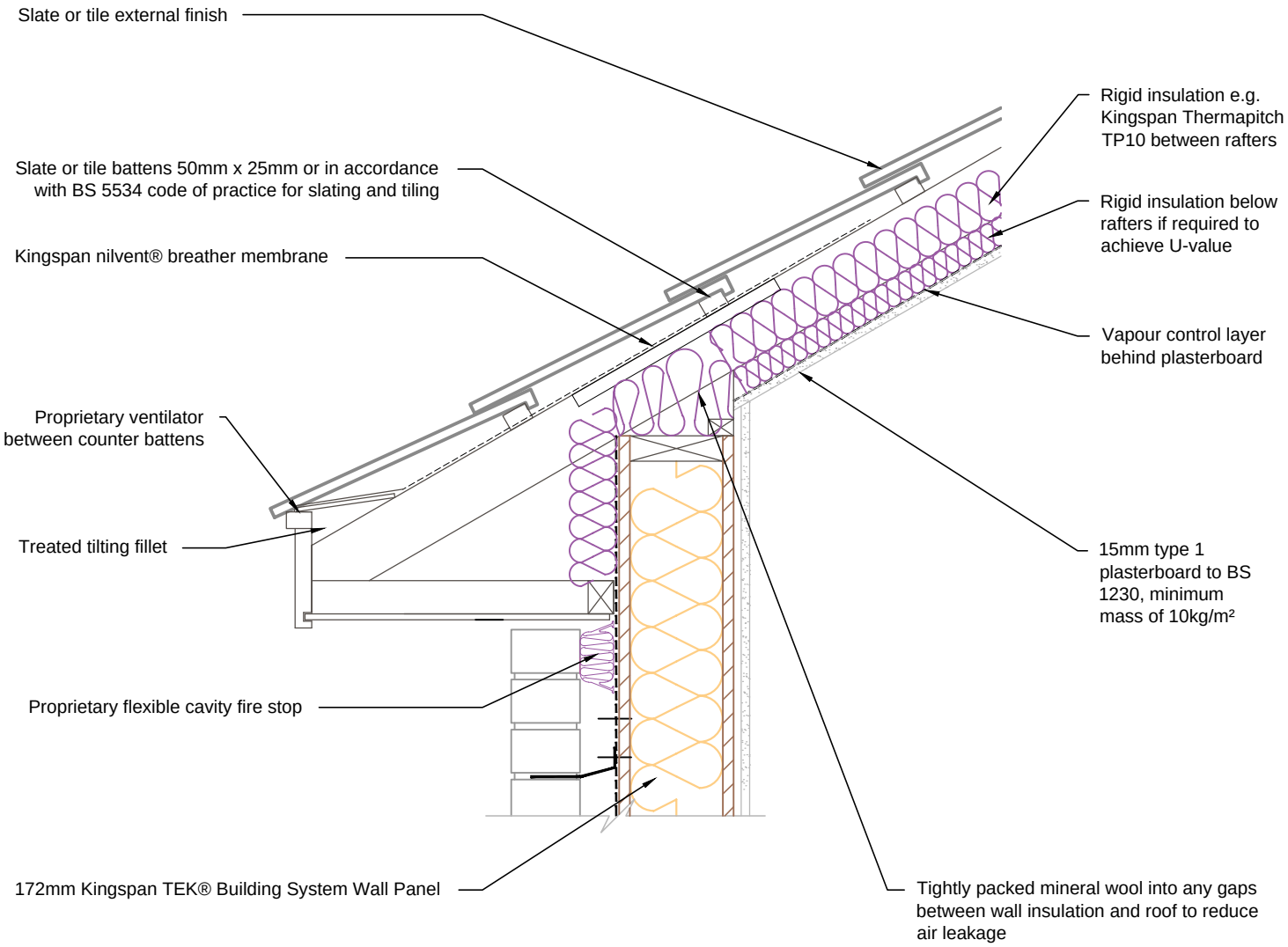

Kingspan TEK® Building System

Kingspan Insulation Limited
Pembridge, Leominster,
Herefordshire, HR6 9LA.
Tel: +44 (0)1544 388 601
Fax: +44 (0)1544 388 888
E-mail: info@kingspantek.co.uk

Kingspan Insulation Limited
Bree Ind. Estate, Castleblaney,
Co. Monaghan, Republic of Ireland
Tel: +353(0)42 979 5000
Fax: +353(0)42 975 4299
E-mail: info@kingspantek.ie

www.kingspantek.co.uk

Typical eaves detail Kingspan TEK® Building System external wall junction with pitched roof - insulated at line of pitch

TEK 172

KIL-R14B-TEK-172

Date:	
03/11/14	
Drawn by: H.E.	Scale: 1:10

R — 14B

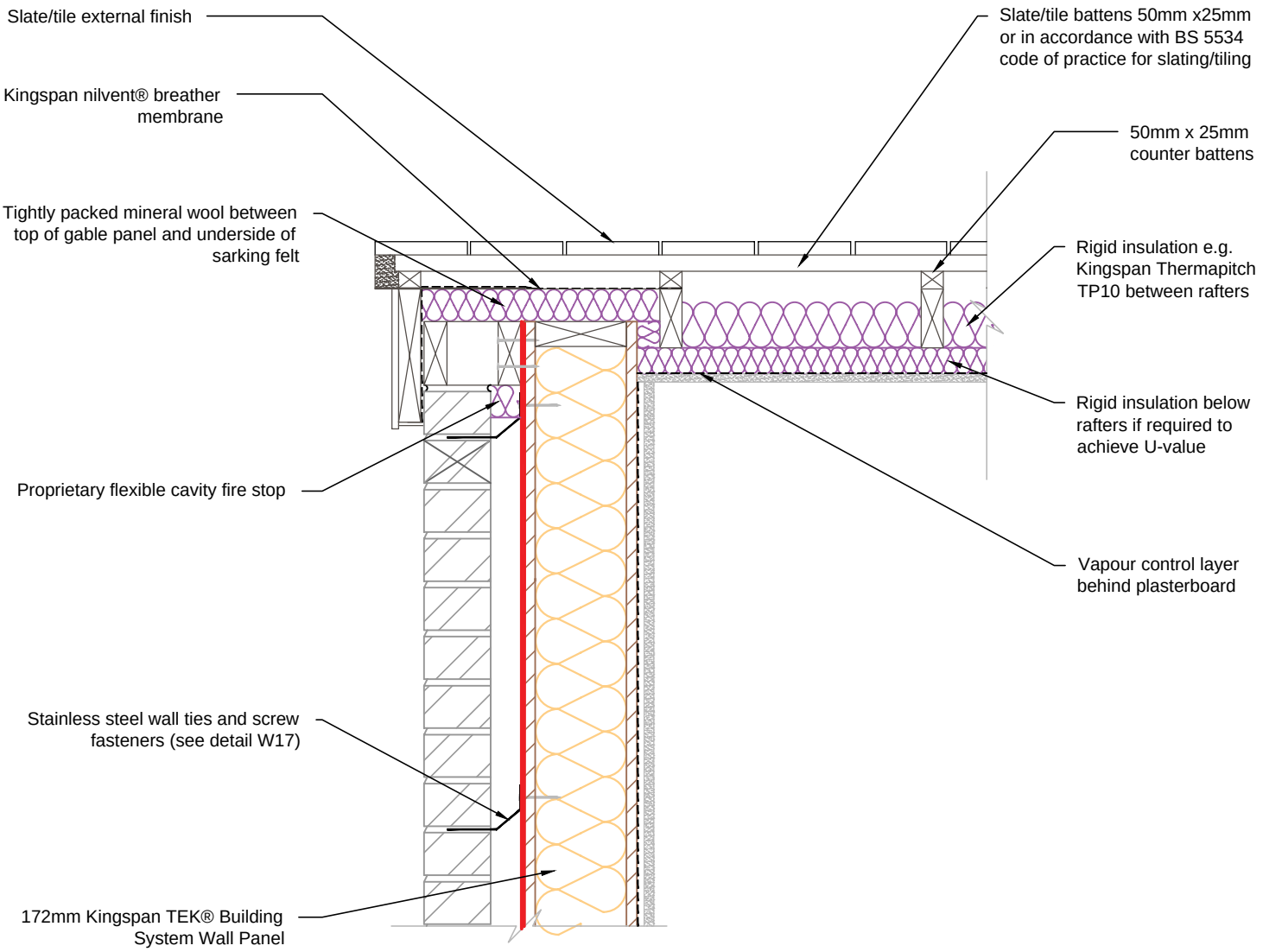

Kingspan TEK® Building System

Kingspan Insulation Limited
Pembridge, Leominster,
Herefordshire, HR6 9LA.
Tel: +44 (0)1544 388 601
Fax: +44 (0)1544 388 888
E-mail: info@kingspantek.co.uk

Kingspan Insulation Limited
Bree Ind. Estate, Castleblaney,
Co. Monaghan, Republic of Ireland
Tel: +353(0)42 979 5000
Fax: +353(0)42 975 4299
E-mail: info@kingspantek.ie

www.kingspantek.co.uk

Kingspan TEK® Building System external wall junction with pitched roof insulated at line of pitch - gable

TEK 172

KIL-R15-TEK-172

Date:	
30/10/14	
Drawn by: H.E.	Scale: 1:10

R 15

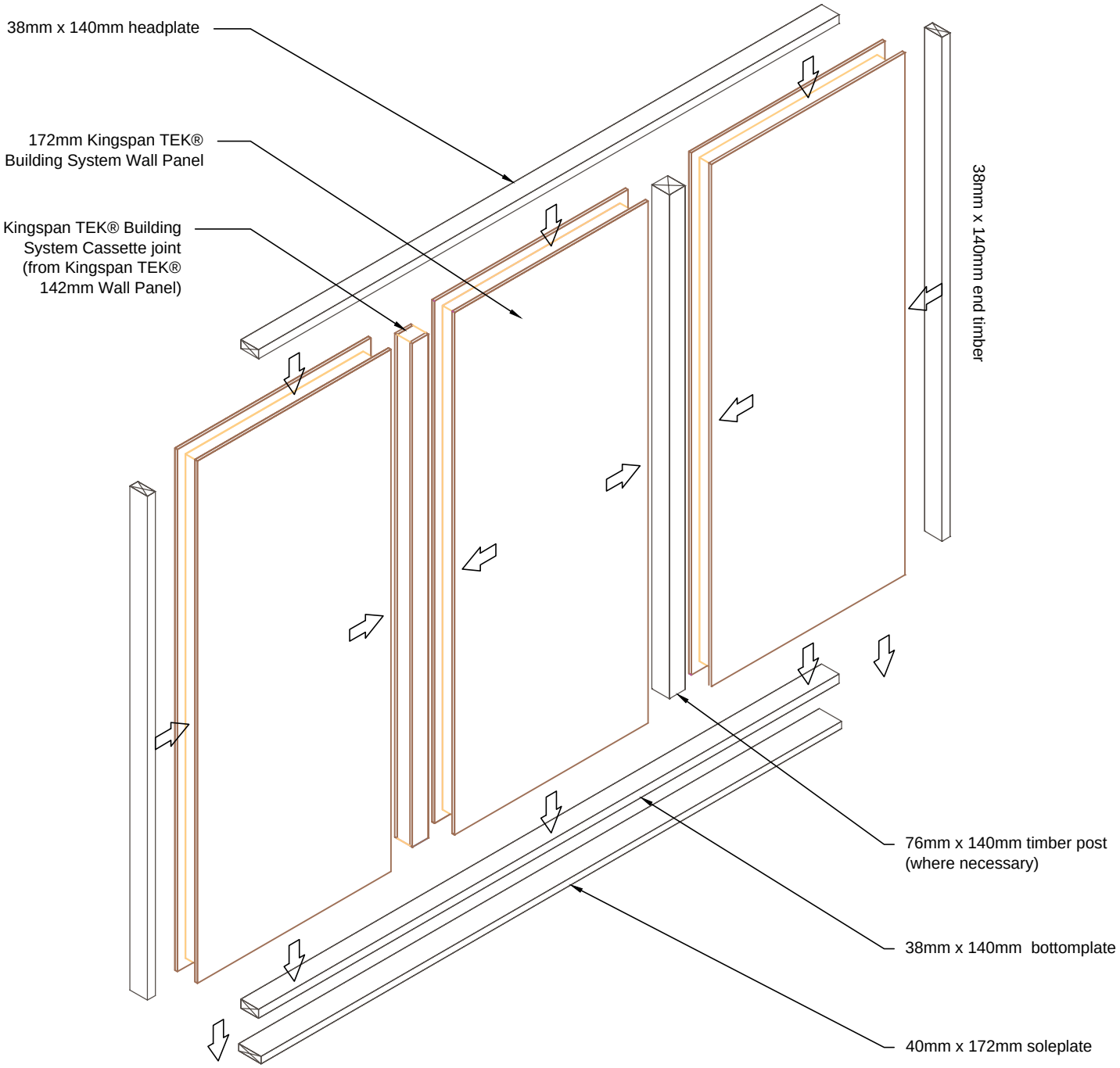

Kingspan TEK Building System

Kingspan Insulation Limited
Pembridge, Leominster,
Herefordshire, HR6 9LA.
Tel: +44 (0)1544 388 601
Fax: +44 (0)1544 388 888
E-mail: info@kingspantek.co.uk

Kingspan Insulation Limited
Bree Ind. Estate, Castleblaney,
Co. Monaghan, Republic of Ireland
Tel: +353(0)42 979 5000
Fax: +353(0)42 975 4299
E-mail: info@kingspantek.ie

www.kingspantek.co.uk

Typical panel joints for Kingspan TEK®
Building System wall panels
TEK 172

KIL-C1-TEK-172

Date:	
30/10/14	
Drawn by: H.E.	Scale: NTS

C — 1

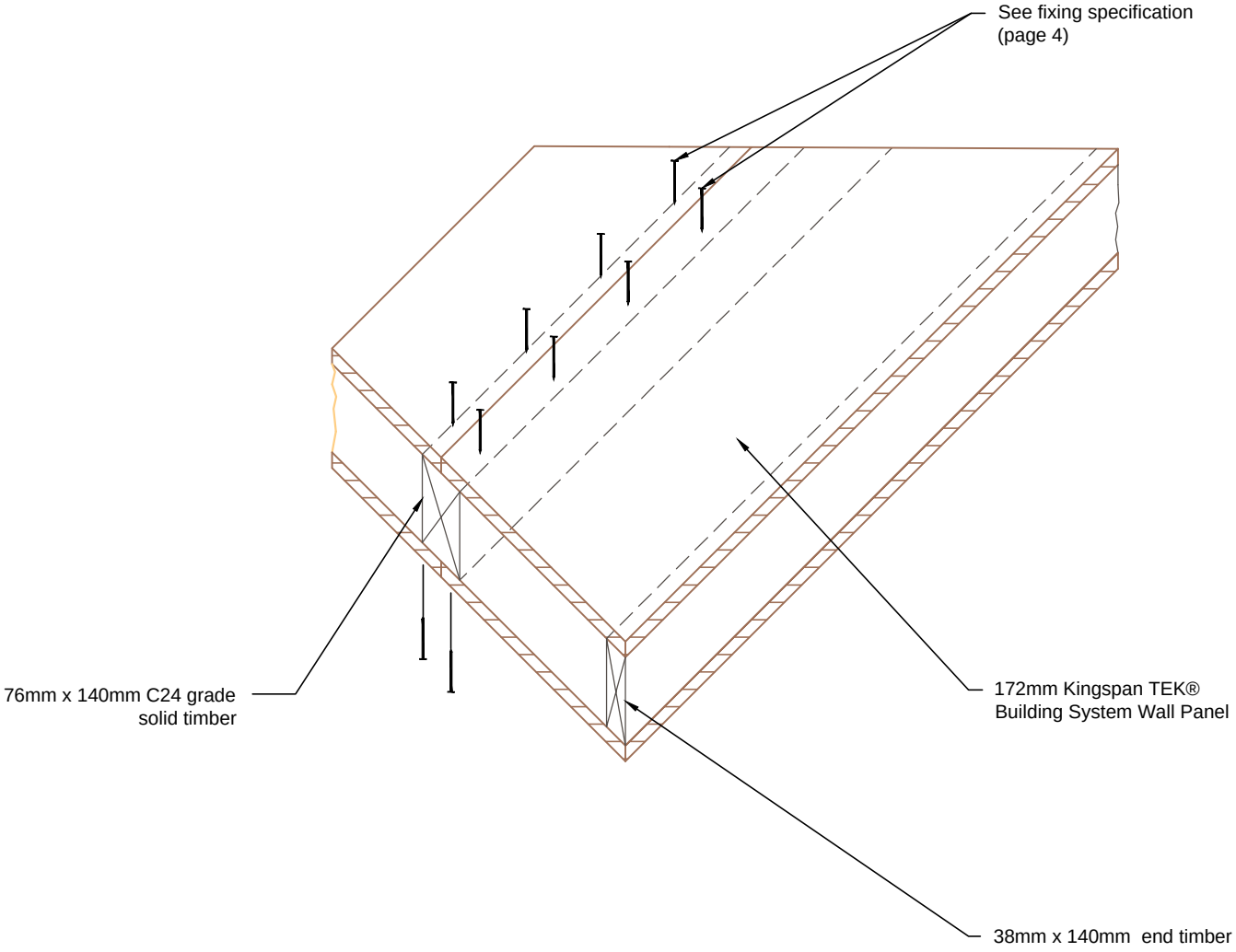

Kingspan TEK Building System

Kingspan Insulation Limited
Pembridge, Leominster,
Herefordshire, HR6 9LA.
Tel: +44 (0)1544 388 601
Fax: +44 (0)1544 388 888
E-mail: info@kingspantek.co.uk

Kingspan Insulation Limited
Bree Ind. Estate, Castleblaney,
Co. Monaghan, Republic of Ireland
Tel: +353(0)42 979 5000
Fax: +353(0)42 975 4299
E-mail: info@kingspantek.ie

www.kingspantek.co.uk

Timber post panel joint

TEK 172

KIL-C2-TEK-172

Date:	
30/10/14	
Drawn by: H.E.	Scale: 1:10

C — 2

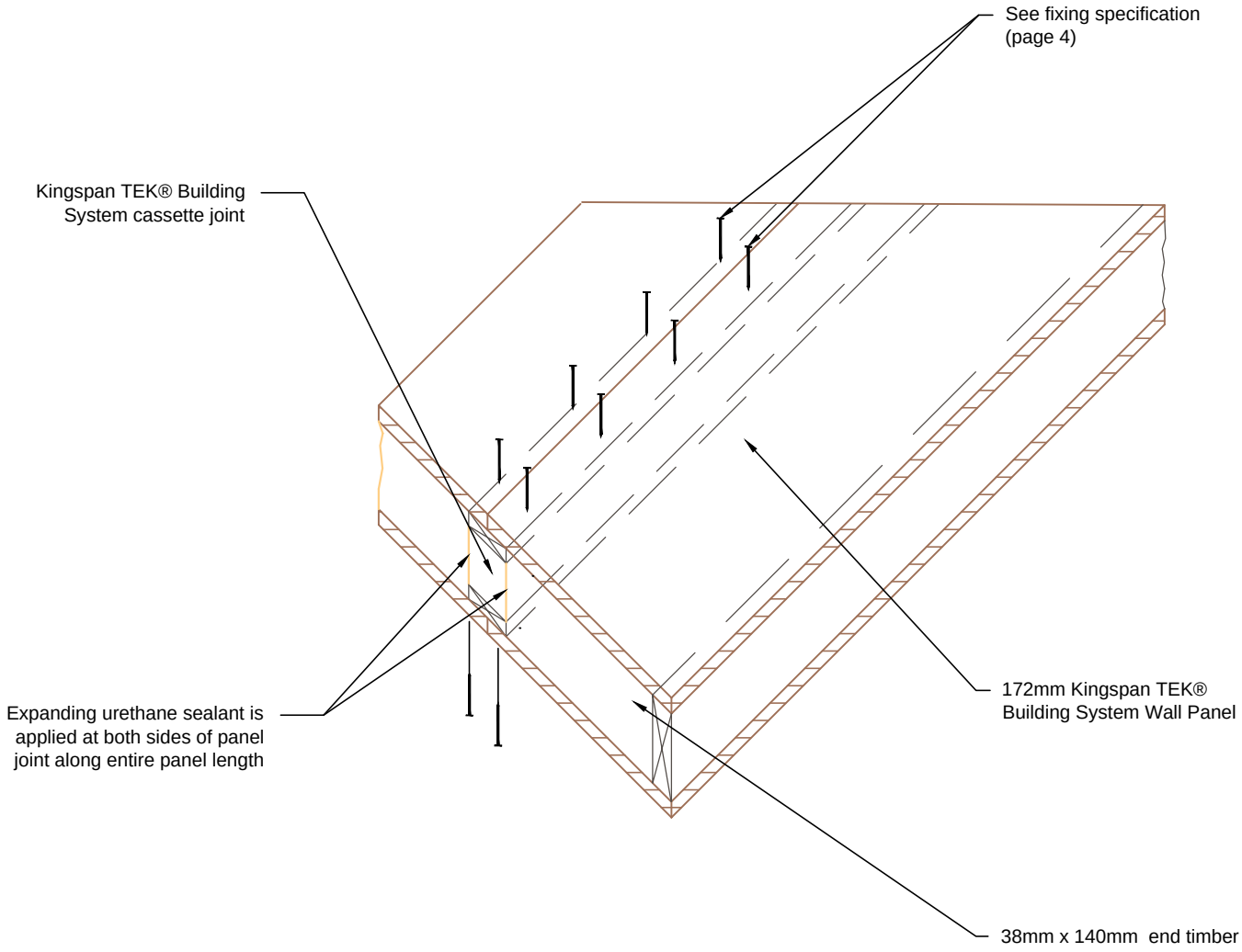

Kingspan TEK® Building System

Kingspan Insulation Limited
Pembridge, Leominster,
Herefordshire, HR6 9LA.
Tel: +44 (0)1544 388 601
Fax: +44 (0)1544 388 888
E-mail: info@kingspantek.co.uk

Kingspan Insulation Limited
Bree Ind. Estate, Castleblaney,
Co. Monaghan, Republic of Ireland
Tel: +353(0)42 979 5000
Fax: +353(0)42 975 4299
E-mail: info@kingspantek.ie

www.kingspantek.co.uk

OSB3 cassette panel joint

TEK 172

KIL-C3-TEK-172

Date:	
30/10/14	
Drawn by: H.E.	Scale: 1:10

C — 3

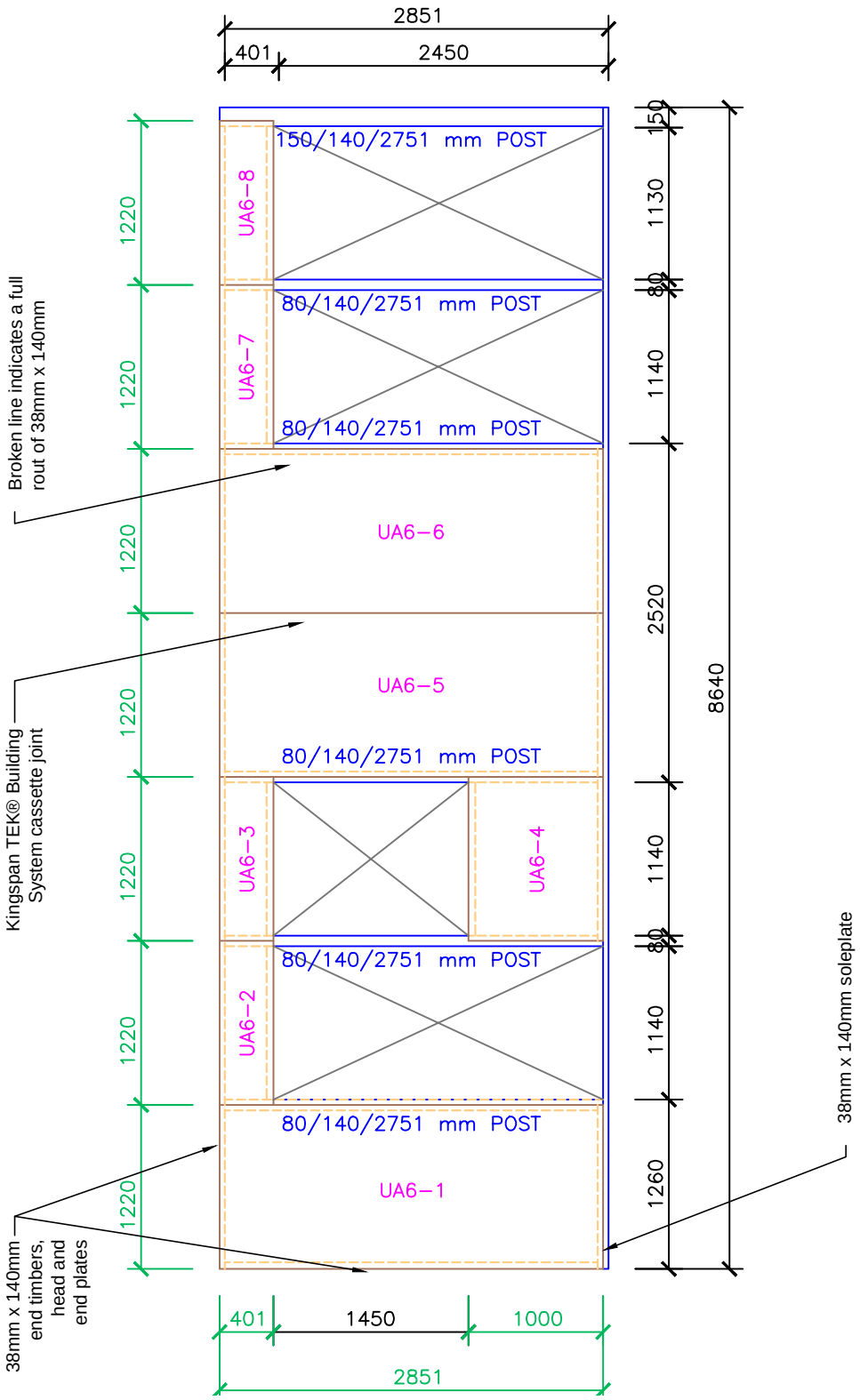

Kingspan TEK Building System

Kingspan Insulation Limited
Pembridge, Leominster,
Herefordshire, HR6 9LA.
Tel: +44 (0)1544 388 601
Fax: +44 (0)1544 388 888
E-mail: info@kingspantek.co.uk

Kingspan Insulation Limited
Bree Ind. Estate, Castleblaney,
Co. Monaghan, Republic of Ireland
Tel: +353(0)42 979 5000
Fax: +353(0)42 975 4299
E-mail: info@kingspantek.ie

www.kingspantek.co.uk

Typical wall elevation with window & door openings.

TEK 172

KIL-C4-TEK-172/A

Date: 30/10/14

Drawn by: H.E.

Scale: 1:50

C — 4

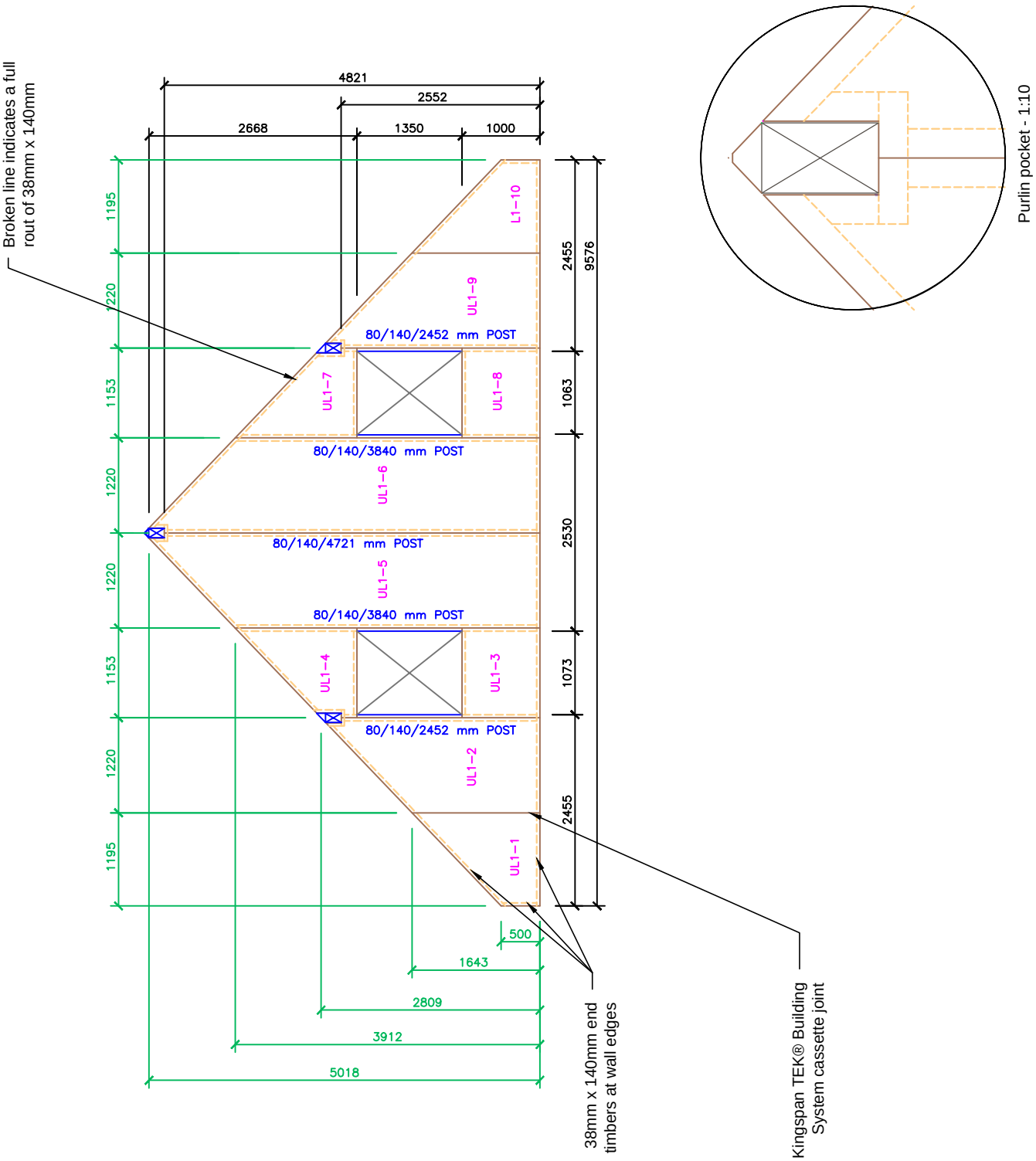

Kingspan TEK® Building System

Kingspan Insulation Limited
Pembridge, Leominster,
Herefordshire, HR6 9LA.
Tel: +44 (0)1544 388 601
Fax: +44 (0)1544 388 888
E-mail: info@kingspantek.co.uk

Kingspan Insulation Limited
Bree Ind. Estate, Castleblaney,
Co. Monaghan, Republic of Ireland
Tel: +353(0)42 979 5000
Fax: +353(0)42 975 4299
E-mail: info@kingspantek.ie

www.kingspantek.co.uk

Typical gable elevation with ridge beam pocket detail.

TEK 172

KIL-C5-TEK-172/A

Date:	
30/10/14	
Drawn by: H.E.	Scale: 1:50

C — 5

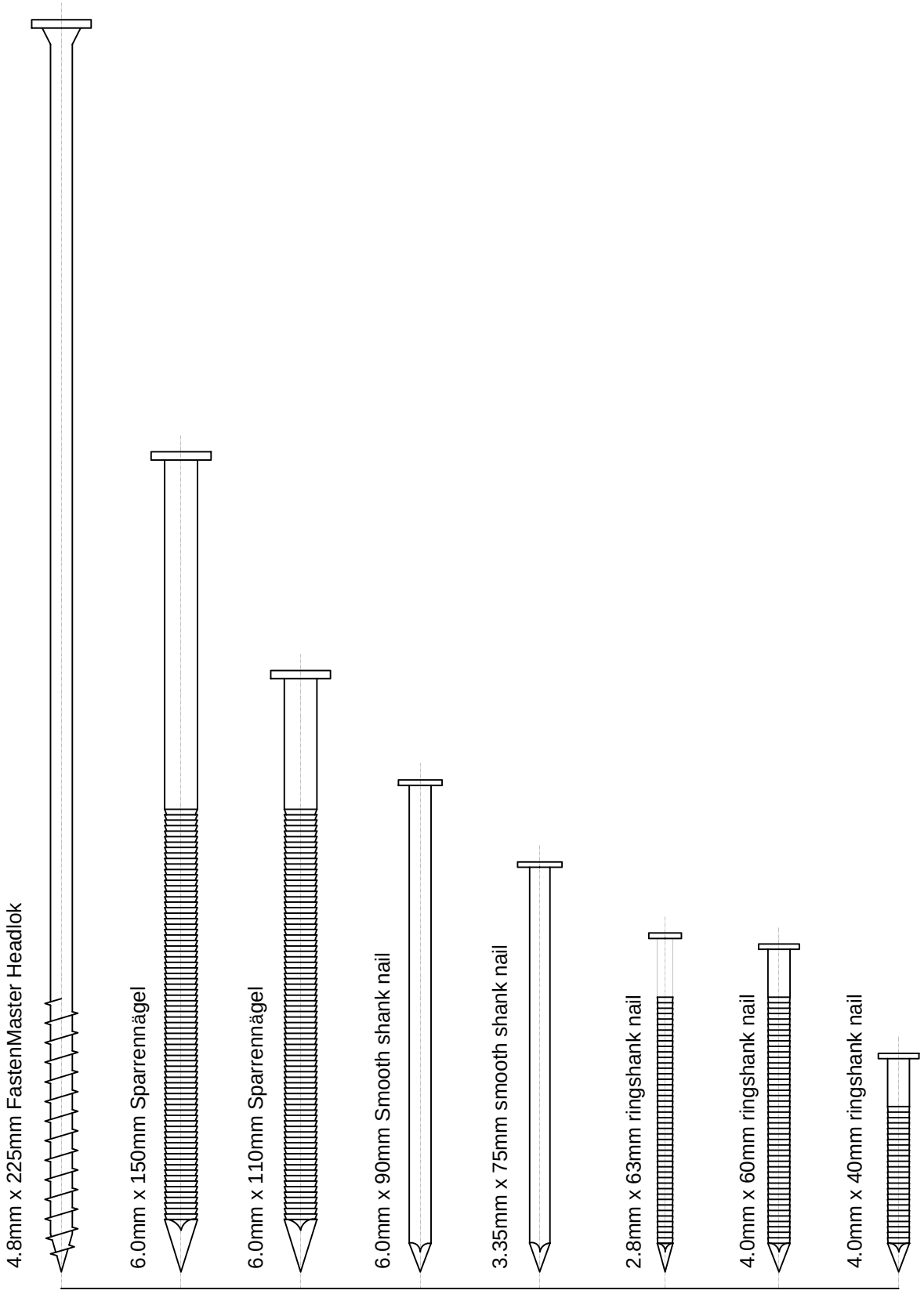

Kingspan TEK Building System

Kingspan Insulation Limited Pembridge,
Leominster, Herefordshire, HR6 9LA.
Tel: +44 (0)1544 388 601
Fax: +44 (0)1544 388 888
E-mail: info@kingspantek.co.uk

Kingspan Insulation Limited
Bree Ind. Estate, Castleblaney,
Co. Monaghan, Republic of Ireland
Tel: +353(0)42 979 5000
Fax: +353(0)42 975 4299
E-mail: info@kingspantek.ie

www.kingspantek.co.uk

Standard fixings - sparrennägel, smooth, ringshanks nails & SIP screw

TEK 172

KIL-M1-TEK-172-3

Date:	
30/10/14	
Drawn by: H.E.	Scale: NTS

M 1

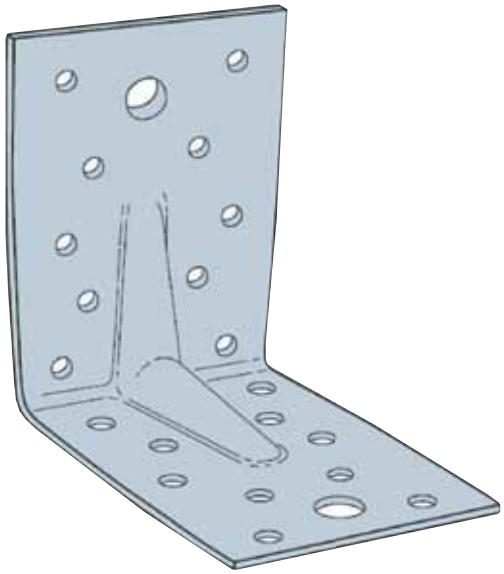

Angle bracket - NTS

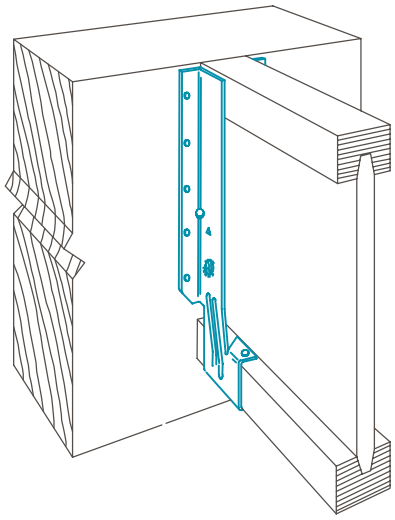

Face mounted joist hanger

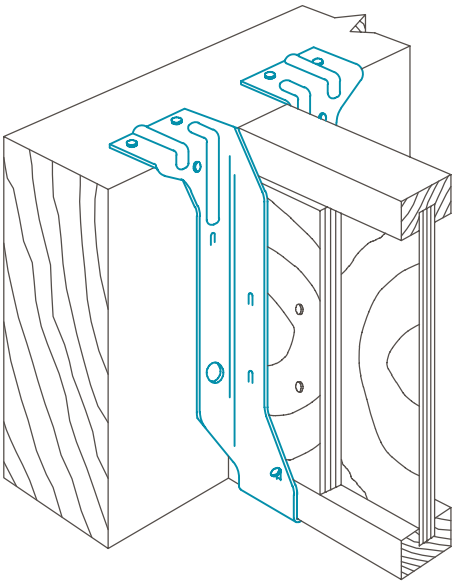

Top flange joist hanger with optional web-stiffness

Kingspan TEK Building System

Kingspan Insulation Limited
Pembridge, Leominster,
Herefordshire, HR6 9LA.
Tel: +44 (0)1544 388 601
Fax: +44 (0)1544 388 888
E-mail: info@kingspantek.co.uk

Kingspan Insulation Limited
Bree Ind. Estate, Castleblaney,
Co. Monaghan, Republic of Ireland
Tel: +353(0)42 979 5000
Fax: +353(0)42 975 4299
E-mail: info@kingspantek.ie

www.kingspantek.co.uk

Standard fixings - hangers & brackets

TEK 172

KIL-M2-TEK-172

Date:	
30/10/14	
Drawn by: H.E.	Scale: 1:50

M 2

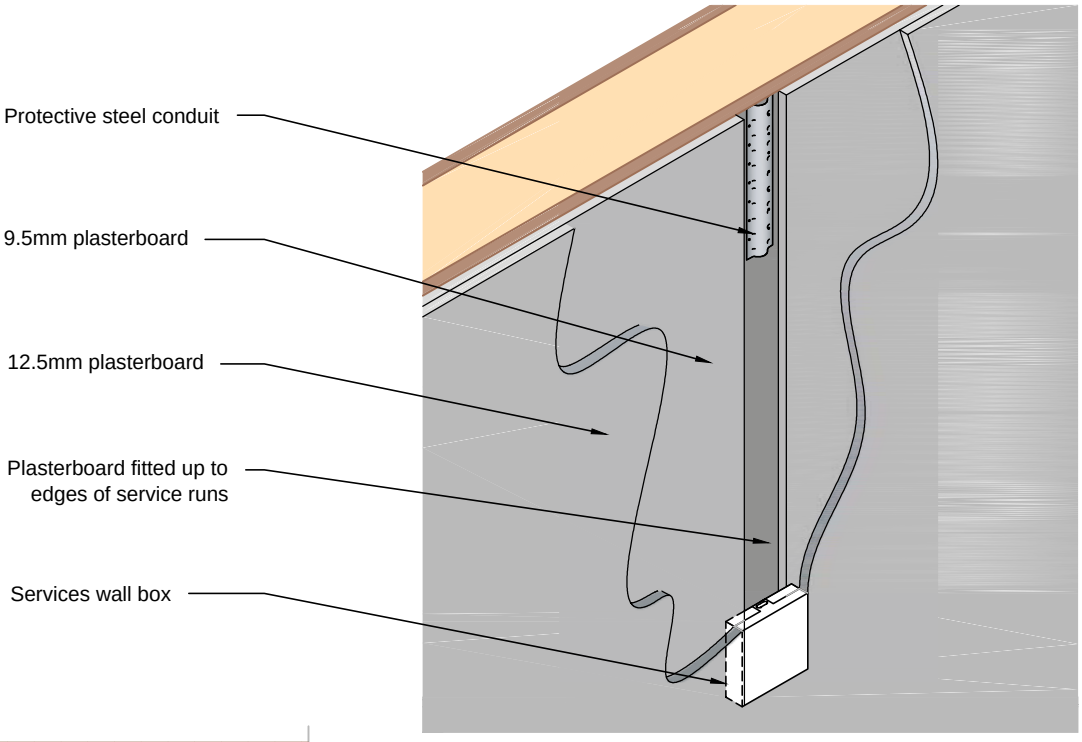

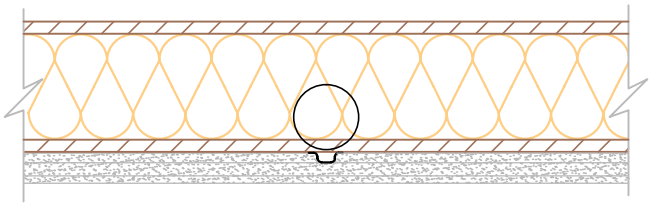

Wall section using triple layer plasterboard to create channel for party wall mounted services.

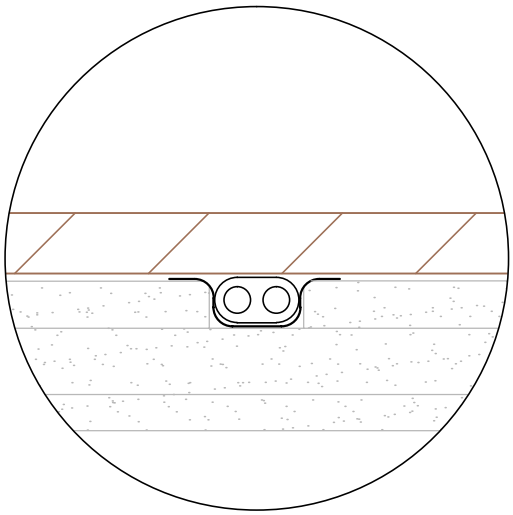

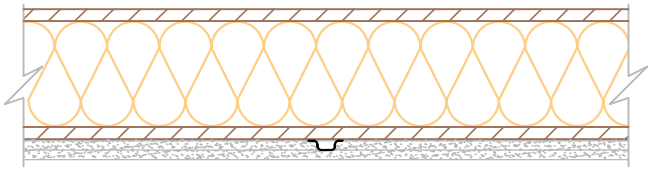

Wall section using double layer plasterboard to create channel for party wall mounted services.

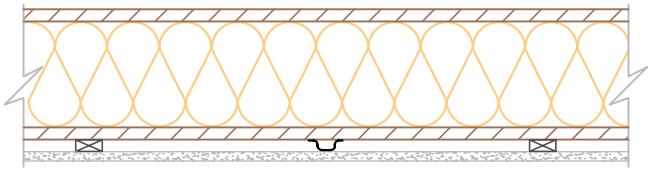

Alternate method using plasterboard on counter battens to create channel for internal wall mounted services.

Kingspan TEK Building System

Kingspan Insulation Limited
Pembridge, Leominster,
Herefordshire, HR6 9LA.
Tel: +44 (0)1544 388 601
Fax: +44 (0)1544 388 888
E-mail: info@kingspantek.co.uk

Kingspan Insulation Limited
Bree Ind. Estate, Castleblaney,
Co. Monaghan, Republic of Ireland
Tel: +353(0)42 979 5000
Fax: +353(0)42 975 4299
E-mail: info@kingspantek.ie

www.kingspantek.co.uk

Wall mounted services detail - electrical

TEK 172

KIL-M3-TEK-172

Date:	
30/10/14	
Drawn by: H.E.	Scale: 1:10

M 3

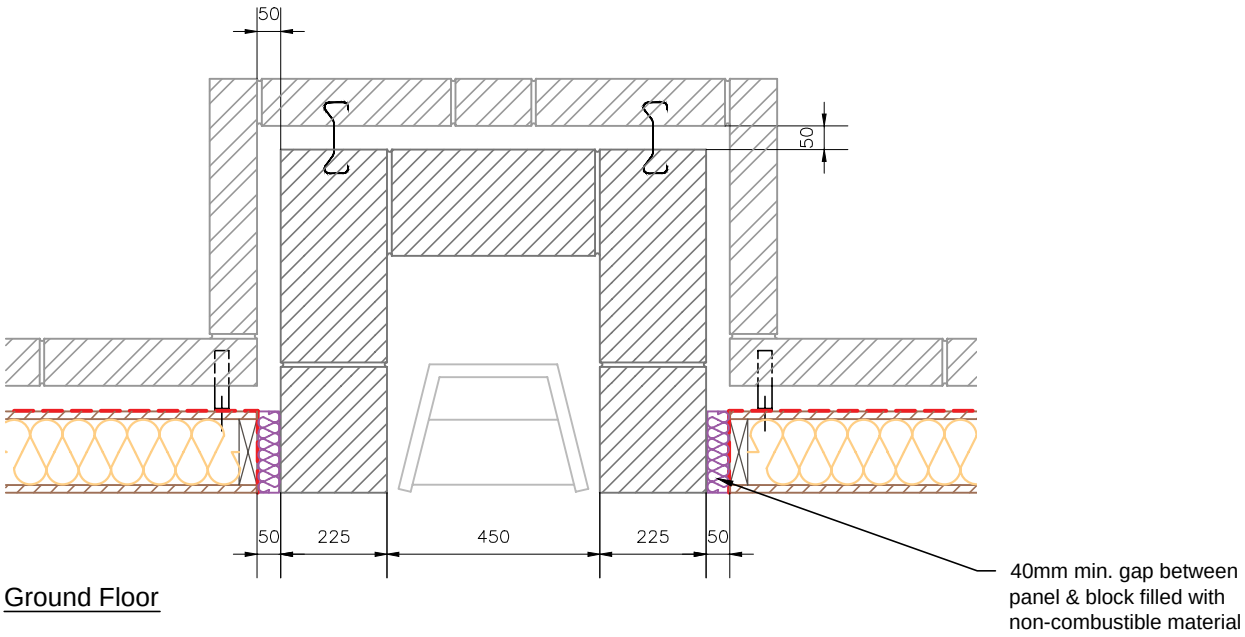

Ground Floor

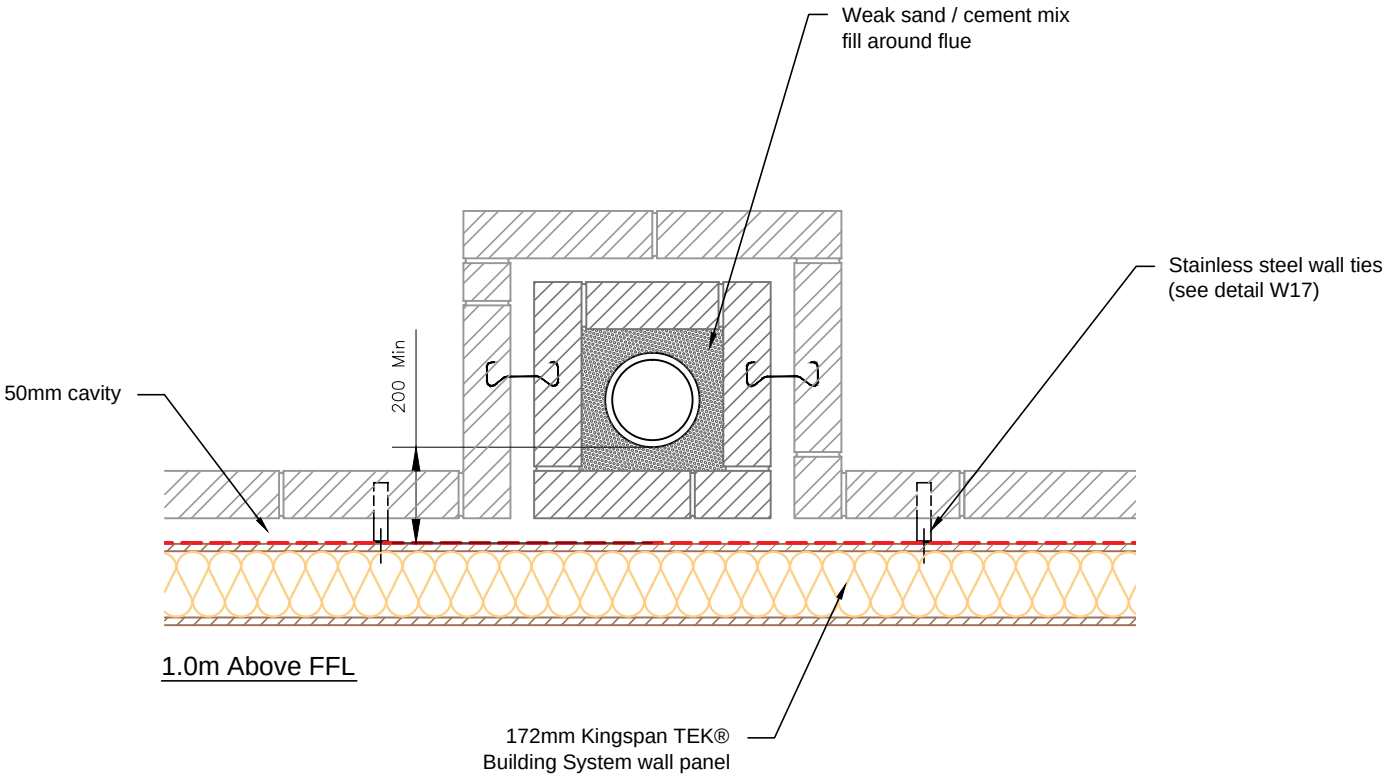

1.0m Above FFL

Kingspan TEK® Building System

Kingspan Insulation Limited
Pembridge, Leominster,
Herefordshire, HR6 9LA.
Tel: +44 (0)1544 388 601
Fax: +44 (0)1544 388 888
E-mail: info@kingspantek.co.uk

Kingspan Insulation Limited
Bree Ind. Estate, Castleblaney,
Co. Monaghan, Republic of Ireland
Tel: +353(0)42 979 5000
Fax: +353(0)42 975 4299
E-mail: info@kingspantek.ie

www.kingspantek.co.uk

External fireplace recess & chimney

TEK 172

KIL-M4-TEK-172

Date:	
30/10/14	
Drawn by: H.E.	Scale: 1:10

M 4

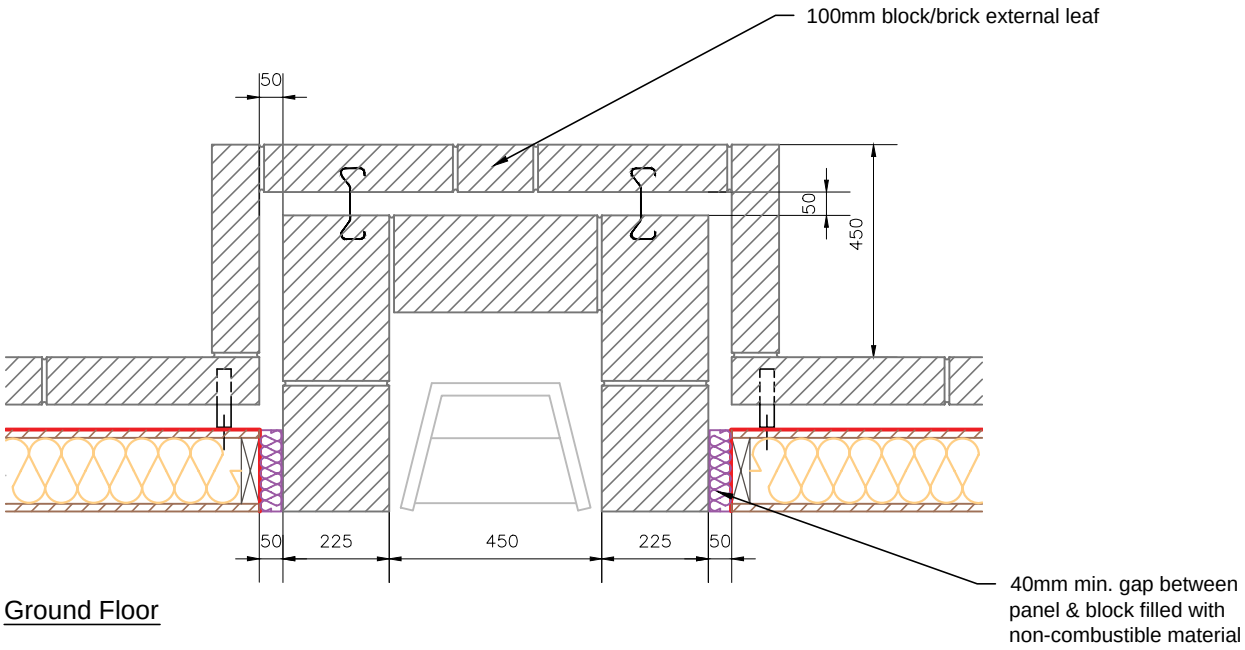

Ground Floor

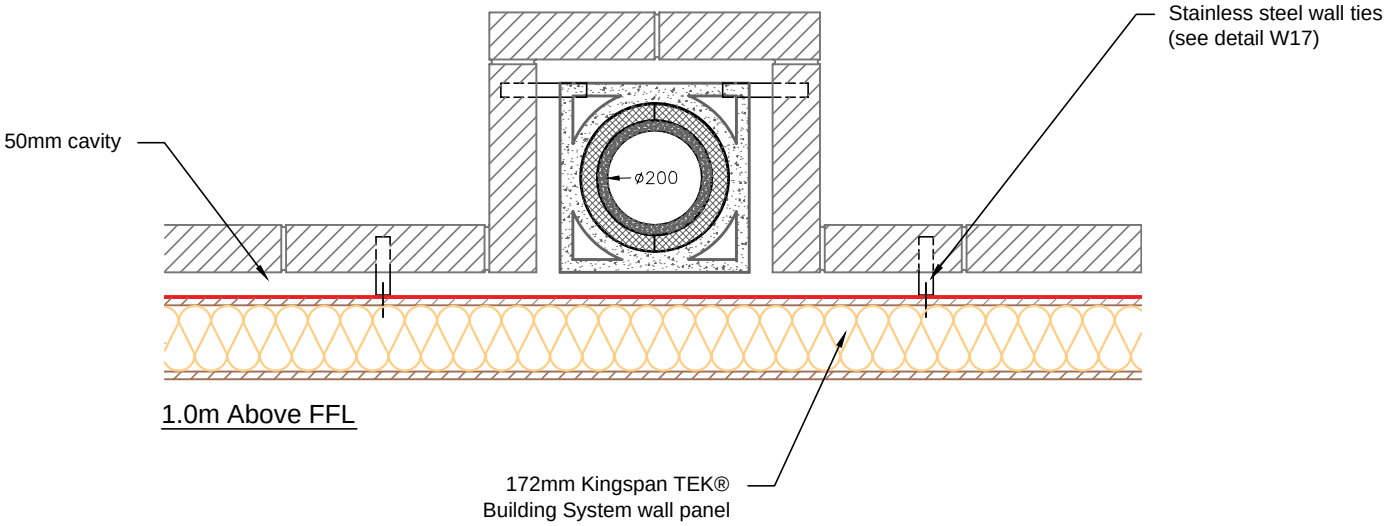

1.0m Above FFL

Kingspan TEK® Building System

Kingspan Insulation Limited
Pembridge, Leominster,
Herefordshire, HR6 9LA.
Tel: +44 (0)1544 388 601
Fax: +44 (0)1544 388 888
E-mail: info@kingspantek.co.uk

Kingspan Insulation Limited
Bree Ind. Estate, Castleblaney,
Co. Monaghan, Republic of Ireland
Tel: +353(0)42 979 5000
Fax: +353(0)42 975 4299
E-mail: info@kingspantek.ie

www.kingspantek.co.uk

Alternate external fireplace recess & chimney

TEK 172

KIL-M5-TEK-172

Date:	
30/10/14	
Drawn by: H.E.	Scale: 1:16

M 5

Contact Details

Customer Service

For quotations, order placement and details of despatches please contact the Kingspan Insulation Customer Service Department on the numbers below:

UK – Tel: +44 (0) 1544 388 601
– Fax: +44 (0) 1544 388 888
– email: customerservice@kingspantek.co.uk

Ireland – Tel: +353 (0) 42 979 5000
– Fax: +353 (0) 42 975 4299
– email: info@kingspantek.ie

Technical Advice

Kingspan Insulation supports all of its products with a comprehensive Technical Advisory Service for specifiers, stockists and contractors.

This includes a computer–aided service designed to give fast, accurate technical advice. Simply phone the Kingspan Insulation Technical Service Department with your project specification. Calculations can be carried out to provide U–values, condensation / dew point risk, required insulation thicknesses etc… Thereafter any number of permutations can be provided to help you achieve your desired targets.

The Kingspan Insulation Technical Service Department can also give general application advice and advice on design detailing and fixing etc... Site surveys are also undertaken as appropriate.

The Kingspan Insulation British Technical Service Department operates under a management system certified to the BBA Scheme for Assessing the Competency of Persons to Undertake U–value and Condensation Risk Calculations.

BBA CERTIFICATE CS/1004-2 U Value Competency Scheme

Please contact the Kingspan Insulation Technical Service Department on the numbers below:

UK – Tel: +44 (0) 1544 387 382
– Fax: +44 (0) 1544 387 482
– email: technical@kingspantek.co.uk

Ireland – Tel: +353 (0) 42 975 4297
– Fax: +353 (0) 42 975 4296
– email: technical@kingspantek.ie

Literature & Samples

Kingspan Insulation produces a comprehensive range of technical literature for specifiers, contractors, stockists and end users. The literature contains clear ‘user friendly’ advice on typical design; design considerations; thermal properties; sitework and product data.

Kingspan **TEK**® technical literature is an essential specification tool. For copies please contact the Kingspan Insulation Marketing Department or visit the *Kingspan* **TEK**® website, using the details below:

UK – Tel: +44 (0) 1544 387 384
– Fax: +44 (0) 1544 387 484
– email: literature@kingspantek.co.uk
– www.kingspantek.co.uk/literature

Ireland – Tel: +353 (0) 42 979 5000
– Fax: +353 (0) 42 975 4299
– email: info@kingspantek.ie
– www.kingspantek.ie/literature

General Enquiries

For all other enquiries contact Kingspan Insulation on the numbers below:

UK – Tel: +44 (0) 1544 388 601
– Fax: +44 (0) 1544 388 888
– email: info@kingspantek.co.uk

Ireland – Tel: +353 (0) 42 979 5000
– Fax: +353 (0) 42 975 4299
– email: info@kingspantek.ie

Kingspan Insulation Ltd. reserves the right to amend product specifications without prior notice. The information, technical details and fixing instructions etc. included in this literature are given in good faith and apply to uses described. Recommendations for use should be verified for suitability and compliance with actual requirements, specifications and any applicable laws and regulations. For other applications or conditions of use, Kingspan offers a Technical Advisory Service (see above), the advice of which should be sought for uses of Kingspan products that are not specifically described herein. Please check that your copy of this literature is current by contacting the Kingspan Insulation Marketing Department (see above).

Kingspan Insulation Ltd is a member of:
The Structural Timber Association (STA)

STRUCTURAL TIMBER ASSOCIATION Member

Kingspan®

Kingspan Insulation Ltd
Pembridge, Leominster, Herefordshire HR6 9LA, UK
Castleblayney, County Monaghan, Ireland
www.kingspantek.co.uk www.kingspantek.ie

® Kingspan, Nilvent, TEK, Thermawall, the zo Device and the Lion Device are Registered Trademarks of the Kingspan Group plc in the UK, Ireland and other countries. All rights reserved. Registered in England & Wales, No. 01882722. Registered Office: Pembridge, Leominster, Herefordshire HR6 9LA UK. VAT GB428602456.
Registered in Ireland, No. 152775.
Registered Office: Bree Industrial Estate, Castleblayney, Co. Monaghan, Ireland. VAT IE6550175J.

Kingspan **TEK**® Delivery Partner